TEST REPORT

Test Report Number:- 165162 (QT43376/1/JPS)/Ref. 1

Report Date:- 19 January 2017

Work Location:- Lucideon Test Facility Stoke-On-Trent

Mega-Grip
Concrete Fixing

Frameless Balustrade

Testing carried out by:-

LUCIDEON

Queens Road
Penkhull
Stoke-On-Trent

T:- 01782 764 428

Contents:-

1. INTRODUCTION

Lucideon Limited were commissioned by the client, Pure Vista Ltd, to carry out line load testing in accordance with BS 6180:2011 Barriers in and about buildings, to allow their balustrade system to be classified for use in accordance with the Code of Practice included within the standard.

The testing was carried out at Lucideon's facilities at Queens Road, Penkhull, Stoke on Trent.

This report summarises the test results obtained during the test programme and does not provide interpretation of those results.

2. Test Samples

A single system was tested and designated as:-

- Mega-Grip

The system had been designed and intended to be used as the base mount for a free standing balustrade. The system and glass were installed by Pure Vista Ltd personnel.

3. Test Programme

A horizontal line load was applied to the system using the following glazed section:-

- Mega-Grip
    - 31.5mm Toughened Laminated PVB Glass
    - 25mm Toughened Glass
    - 33mm Toughened Laminated PVB Glass
    - 25.5mm Toughened Sentry Glass

4. Test Preparation

The Mega-Grip Channel was bolted to the top of a cast concrete slab, which was fixed to the floor of the test facility. The 1.0Mtr Length of Mega-grip was bolted with M12 bolts to fischer chemically fixed anchors. The bolts were set at 200mm centres.

Fixings Used:-

Fischer RG 18 x 125 M12 [Art Nr:- 50562] Fisher RSB 16 Superbond [Art Nr 518825]

The appropriate thickness glass panel was fitted into the channel using the glass slip clamping system and clamping bar. The clamps were fitted at 4 per metre and spaced 125mm from the edge with 200mm between the clamps.

5. Test Method

A horizontally imposed line load was applied to the glass at a height of 1100 millimetres above the datum level of the floor and the deflection measured at the top central point of the panel 1100 millimetres above the datum level of the floor. The load was applied via a hydraulic ram and the deflection measured using a linear voltage displacement transducer.

6. Results

The tests were carried out in accordance with the guidance given in BS 6180 Barriers in and about buildings – code of practice. The standard states that the maximum allowable deflection for a free standing glass protective barrier panel is 25mm.

Table 2 of BS 6180 Barriers in and about buildings – code of practice categorises parapets, barriers and balustrades for areas of use depending on the loads they have achieved under testing.

The loads achieved by the Pure Vista system (Mega-Grip) tested under horizontally imposed line load to the maximum deflection of 25mm are given in Table 1. All figures quoted in the table contain no safety factors and are direct loads as achieved by the system under test conditions.

Table 2 summarises the suitability of the tested system in accordance with Table 2 of BS 6180:2011

Note: The results given in this report apply only to the samples that have been tested.

Table 1 – Summary of performance of Pure Vista Ltd Mega-Grip Balustrade System tested under Horizontally imposed Line Load.

Glass Span (mm)	Glass Type	Test Height (mm)	Imposed Line Load at 25mm Deflection (KN/Mtr)	Working Line Load for System (KN/M)	Deflection at Working Line Load for system (mm)
1000	31.5mm Toughened Laminated PVB	1100	4.00	3.0	16.76
1000	25mm Toughened Monolithic	1100	3.35	3.0	22.19
1000	33mm Toughened Laminated PVB	1100	4.46	3.0	15.25
1000	25.5mm Toughened Laminated Sentry	1100	3.59	3.0	20.13

Table 2 – Summary of Suitability of Pure Vista Ltd Mega-Grip System in accordance with Table 2 of BS 6180:2011

Type of Occupancy for Part of the Building	Examples of Specific Use	Horizontal Uniformly Distributed Line Load (Kn/M)		Posi-Glaze		
			31.5mm PVB	25mm Tough	33mm PVB	25.5mm Sentry
Domestic and residential activities	All areas within or serving exclusively one single family dwelling including stairs, etc. but excluding balconies and edge of roofs	0.36	✓	✓	✓	✓
	Other residential, i.e. houses of multiple occupancy and balconies, including Juliette balconies and edges of roofs in single family dwellings.	0.74	✓	✓	✓	✓
Offices and work areas not included elsewhere, including storage areas	Light access stairs and gangways not more than 600mm wide	0.22	✓	✓	✓	✓
	Light pedestrian traffic routes in industrial and storage buildings except designated escape routes	0.36	✓	✓	✓	✓
	Areas not susceptible to overcrowding in office and institutional buildings, also industrial and storage buildings except as given above.	0.74	✓	✓	✓	✓
Areas where people might congregate	Areas having fixed seating within 530mm of the barrier, balustrade or parapet.	1.50	✓	✓	✓	✓
Areas with Tables or Fixed Seating	Restaurants and Bars	1.50	✓	✓	✓	✓
Areas without obstacles for moving people and not susceptible to overcrowding	Stairs, landings, corridors, ramps	0.74	✓	✓	✓	✓
	External balconies including Juliette balconies and edges of roofs; footways and pavements within building cartilage adjacent to basement/sunken areas	0.74	✓	✓	✓	✓
Areas susceptible to overcrowding	Footways or pavements less than 3m wide adjacent to sunken areas	1.50	✓	✓	✓	✓
	Theatres, cinemas, discotheques, bars, auditoria, shopping malls, assembly areas, studio; footways or pavements greater than 3m wide adjacent to sunken areas	3.00	✓	✓	✓	✓
	Grandstands and Stadia	(Note 1)	-	-	-	✓
Retail Areas	All retail areas including public areas of banks/building societies or betting shops	1.50	✓	✓	✓	✓
Vehicular	Pedestrian areas in car parks including stairs, landings, ramps, edges of internal floors, footways, edges of roofs	1.50 (Note 2)	✓	✓	✓	✓
	Horizontal loads imposed by vehicles	(Note 2)	-	-	-	✓

Chart 1 - Load Deflection Curve for Pure Vista Mega Grip Balustrade System

Test Report: 165162/Ref. 1

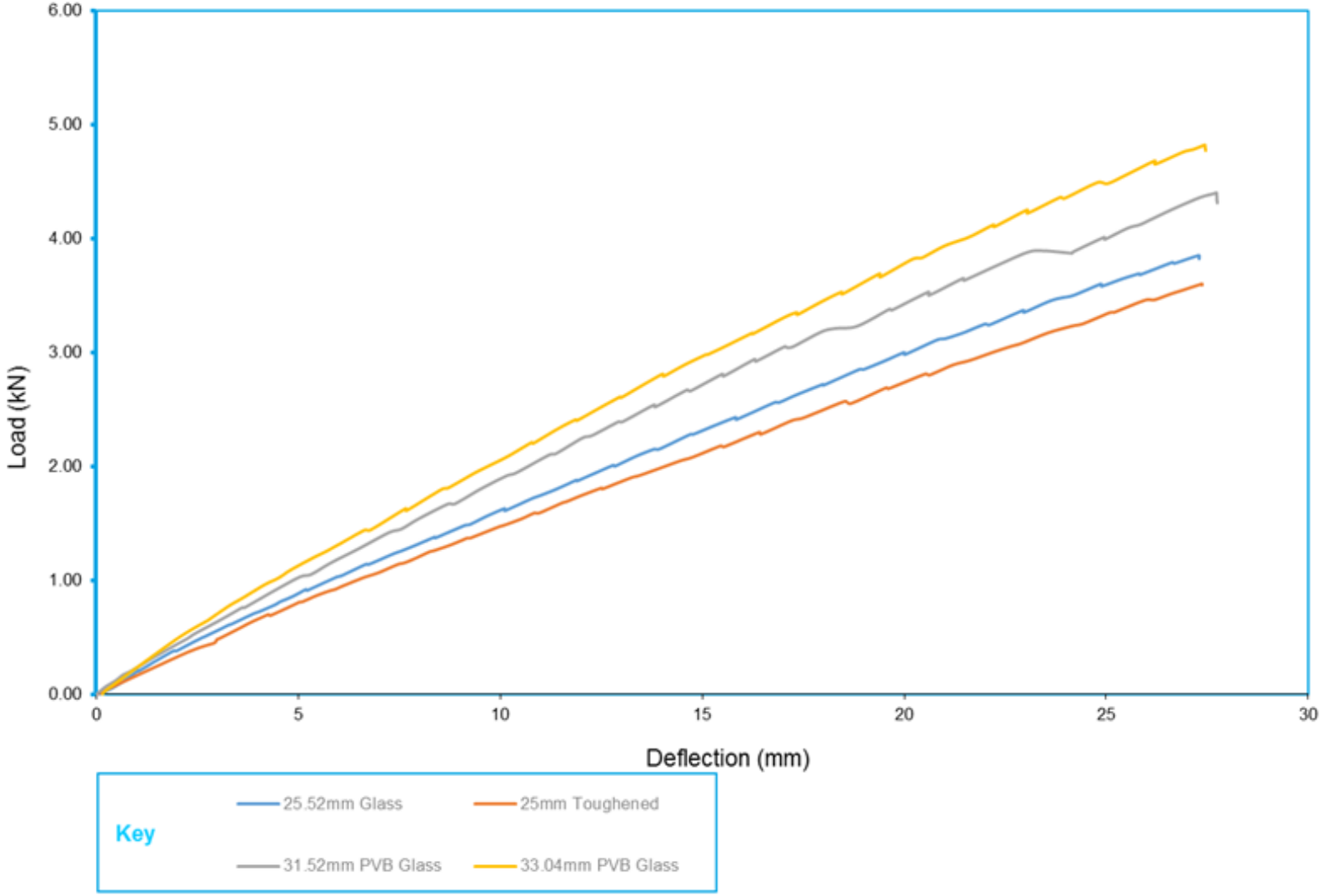

DO NOT SCALE DRAWING	REVISION
Purevista	
TITLE: **Megagrip Channel Base Drilling**	
DWG NO. 15-06-15	A4
SCALE:1:10	SHEET 1 OF 1

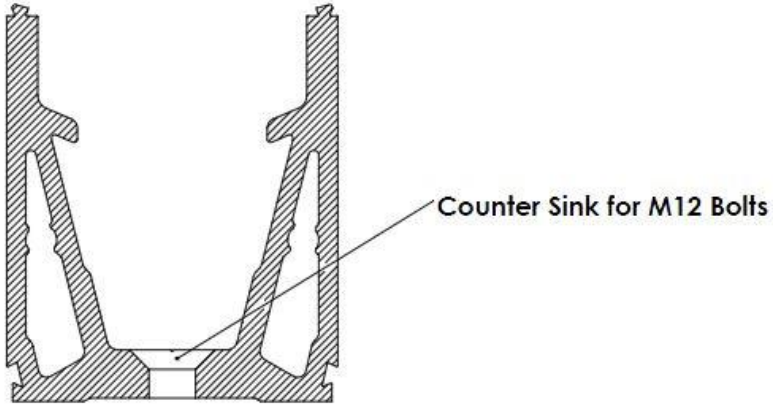

SECTION A-A

SCALE 1 : 2

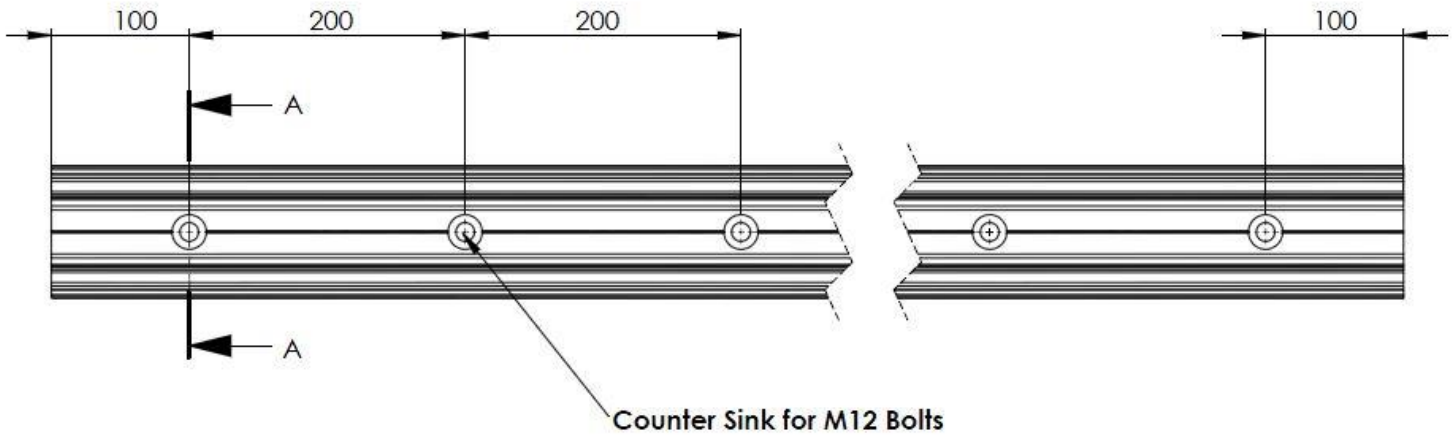

TEST REPORT

Test Report Number:- 164020 (QT42423/1/JPS)/Ref. 1

Report Date:- 20 September 2016

Work Location:- Lucideon Test Facility Stoke-On-Trent

Mega-Grip

Frameless Balustrade

Testing carried out by:-

LUCIDEON

Queens Road
Penkhull
Stoke-On-Trent

T:- 01782 764 428

Contents:-

1. INTRODUCTION

Lucideon Limited were commissioned by the client, Pure Vista Ltd, to carry out line load testing in accordance with BS 6180:2011 Barriers in and about buildings, to allow their balustrade system to be classified for use in accordance with the Code of Practice included within the standard.

The testing was carried out at Lucideon's facilities at Queens Road, Penkhull, Stoke on Trent.

This report summarises the test results obtained during the test programme and does not provide interpretation of those results.

2. Test Samples

A single system was tested and designated as:-

- Mega-Grip

The system had been designed and intended to be used as the base mount for a free standing balustrade. The system and glass were installed by Pure Vista Ltd personnel.

3. Test Programme

A horizontal line load was applied to the system using the following glazed section:-

- Mega-Grip
    - 31.5mm Toughened Laminated PVB Glass
    - 25mm Toughened Glass
    - 33mm Toughened Laminated PVB Glass
    - 25.5mm Toughened Sentry Glass

4. Test Preparation

The Mega-Grip Channel was bolted to the top of a 10mm thick steel L-Section, which was welded and bolted to the floor of the test facility. The 1.0Mtr Length of Mega-grip was bolted to the steel section at 200mm centres using M12 bolts in Pre-drilled counter sunk holes.

The appropriate thickness glass panel was fitted into the channel using the glass slip clamping system and clamping bar. The clamps were fitted at 4 per metre and spaced 100mm from the edge with 200mm between the clamps (see plate 2).

5. Test Method

A horizontally imposed line load was applied to the glass at a height of 1100 millimetres above the datum level of the floor and the deflection measured at the top central point of the panel 1100 millimetres above the datum level of the floor. The load was applied via a hydraulic ram and the deflection measured using a linear voltage displacement transducer.

6. Results

The tests were carried out in accordance with the guidance given in BS 6180 Barriers in and about buildings – code of practice. The standard states that the maximum allowable deflection for a free standing glass protective barrier panel is 25mm.

Table 2 of BS 6180 Barriers in and about buildings – code of practice categorises parapets, barriers and balustrades for areas of use depending on the loads they have achieved under testing.

The loads achieved by the Pure Vista system (Mega-Grip) tested under horizontally imposed line load to the maximum deflection of 25mm are given in Table 1. All figures quoted in the table contain no safety factors and are direct loads as achieved by the system under test conditions.

Table 2 summarises the suitability of the tested system in accordance with Table 2 of BS 6180:2011

Note: The results given in this report apply only to the samples that have been tested.

Table 1 – Summary of performance of Pure Vista Ltd Mega-Grip Balustrade System tested under Horizontally imposed Line Load.

Glass Span (mm)	Glass Type	Test Height (mm)	Working Line Load for System (KN/M)	Deflection at Working Line Load for system (mm)
1000	31.5mm Toughened Laminated PVB	1100	3.0	16.55
1000	25mm Toughened Monolithic	1100	3.0	14.67
1000	33mm Toughened Laminated PVB	1100	3.0	11.00
1000	25.5mm Toughened Laminated Sentry	1100	3.0	13.21

Table 2 – Summary of Suitability of Pure Vista Ltd Mega-Grip System in accordance with Table 2 of BS 6180:2011

Type of Occupancy for Part of the Building	Examples of Specific Use	Horizontal Uniformly Distributed Line Load (Kn/M)		Posi-Glaze		
			31.5mm PVB	25mm Tough	33mm PVB	25.5mm Sentry
Domestic and residential activities	All areas within or serving exclusively one single family dwelling including stairs, etc. but excluding balconies and edge of roofs	0.36	✓	✓	✓	✓
	Other residential, i.e. houses of multiple occupancy and balconies, including Juliette balconies and edges of roofs in single family dwellings.	0.74	✓	✓	✓	✓
Offices and work areas not included elsewhere, including storage areas	Light access stairs and gangways not more than 600mm wide	0.22	✓	✓	✓	✓
	Light pedestrian traffic routes in industrial and storage buildings except designated escape routes	0.36	✓	✓	✓	✓
	Areas not susceptible to overcrowding in office and institutional buildings, also industrial and storage buildings except as given above.	0.74	✓	✓	✓	✓
Areas where people might congregate	Areas having fixed seating within 530mm of the barrier, balustrade or parapet.	1.50	✓	✓	✓	✓
Areas with Tables or Fixed Seating	Restaurants and Bars	1.50	✓	✓	✓	✓
Areas without obstacles for moving people and not susceptible to overcrowding	Stairs, landings, corridors, ramps	0.74	✓	✓	✓	✓
	External balconies including Juliette balconies and edges of roofs; footways and pavements within building cartilage adjacent to basement/sunken areas	0.74	✓	✓	✓	✓
Areas susceptible to overcrowding	Footways or pavements less than 3m wide adjacent to sunken areas	1.50	✓	✓	✓	✓
	Theatres, cinemas, discotheques, bars, auditoria, shopping malls, assembly areas, studio; footways or pavements greater than 3m wide adjacent to sunken areas	3.00	✓	✓	✓	✓
	Grandstands and Stadia	(Note 1)	-	-	-	✓
Retail Areas	All retail areas including public areas of banks/building societies or betting shops	1.50	✓	✓	✓	✓
Vehicular	Pedestrian areas in car parks including stairs, landings, ramps, edges of internal floors, footways, edges of roofs	1.50 (Note 2)	✓	✓	✓	✓
	Horizontal loads imposed by vehicles	(Note 2)	-	-	-	✓

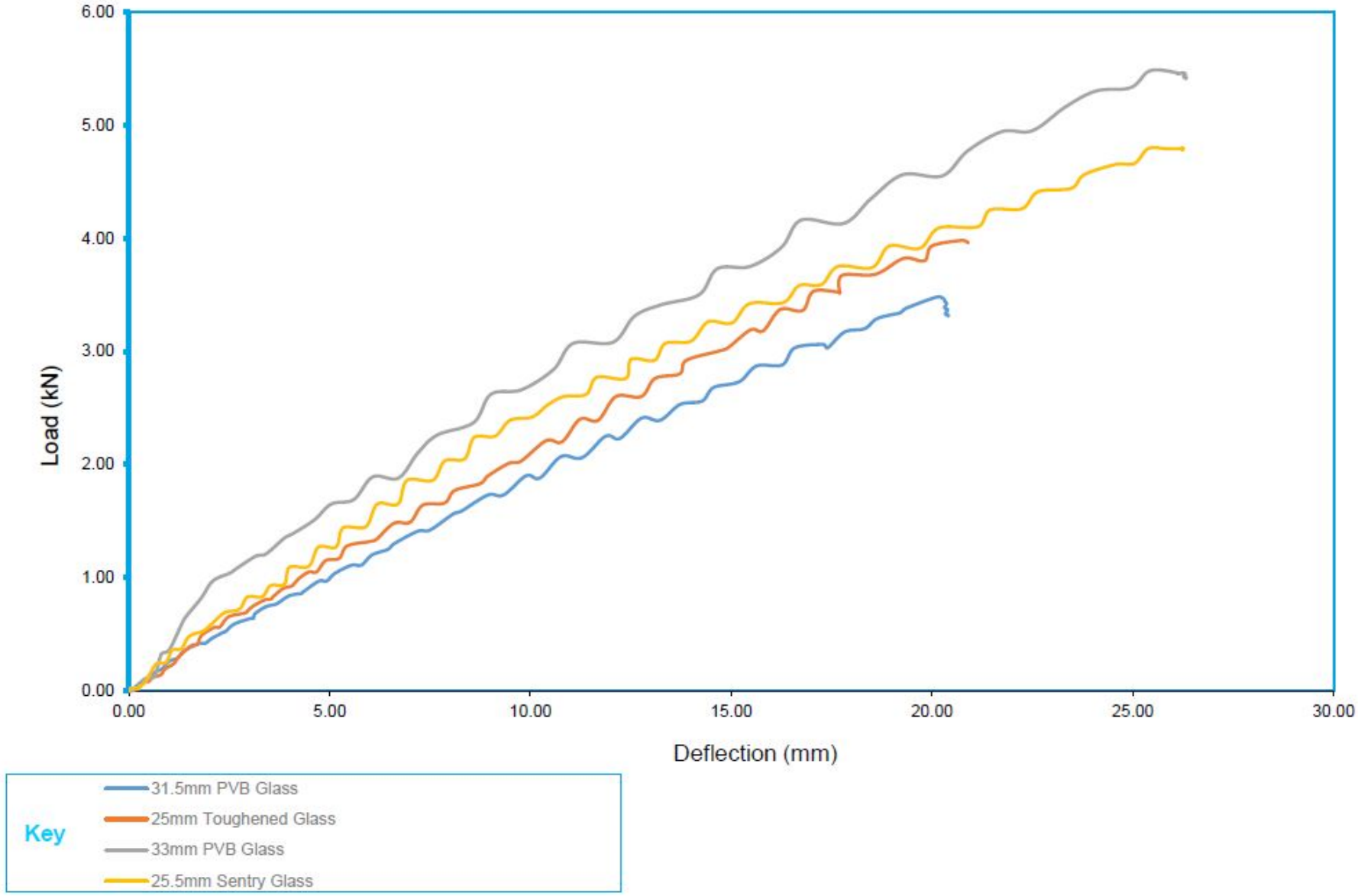
6.00
5.00
4.00
3.00
2.00
1.00
0.00
Load (kN)
0.00
5.00
10.00
15.00
20.00
25.00
30.00
Deflection (mm)
Key
31.5mm PVB Glass
25mm Toughened Glass
33mm PVB Glass
25.5mm Sentry Glass

DO NOT SCALE DRAWING	REVISION
Purevista	
TITLE: **Megagrip Channel Base Drilling**	
DWG NO. 15-06-15	A4
SCALE:1:10	SHEET 1 OF 1

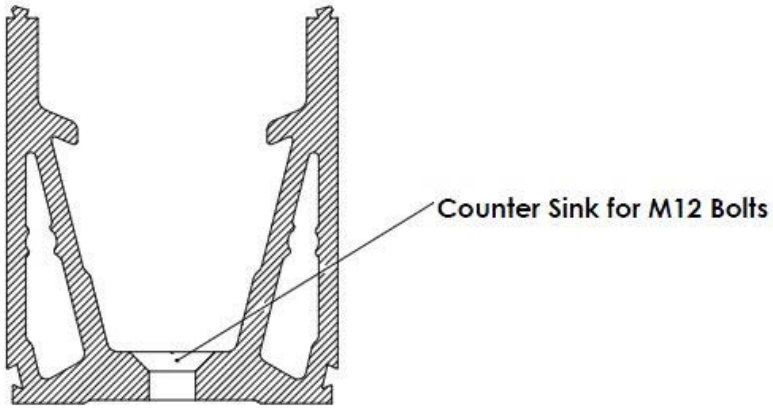

SECTION A-A

SCALE 1 : 2

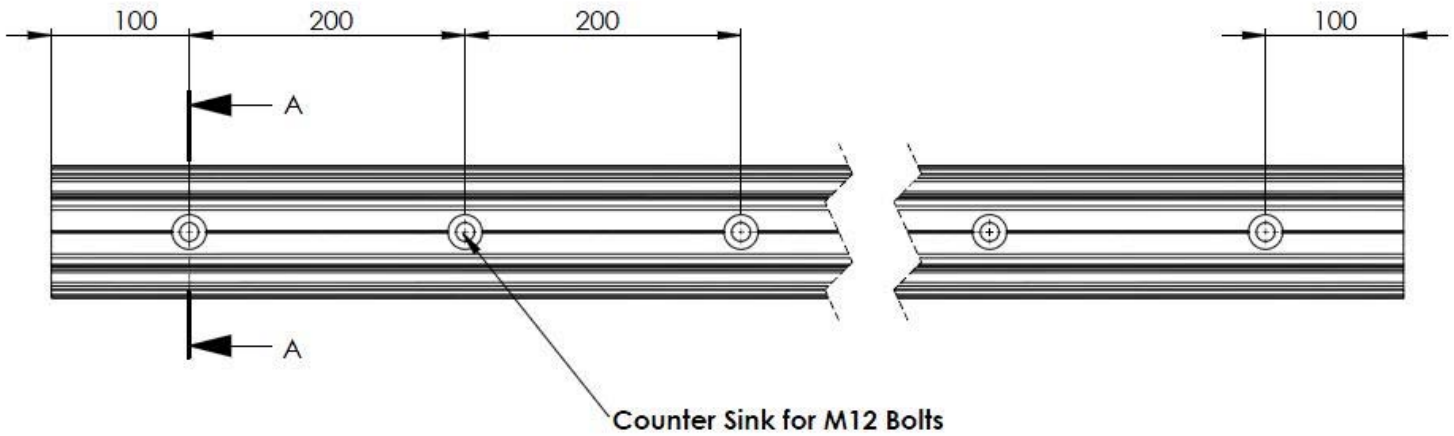

TEST REPORT

Lucideon Reference:	182262 (QT-50274/1/GMB)/Ref. 1
Project Title:	Testing of Pure Vista MegaGrip Balustrade System Incorporating 25.5 mm PVB Glass in Accordance with BS 6180:2011
Client:	
For the Attention of:	
Author(s):	Miss Lisa Cobden
Report Date:	31 May, 2018
Purchase Order No.:	2089
Work Location:	Lucideon UK

Mr Justin Fryer
Consultancy Team
Reviewer

Miss Lisa Cobden
Consultancy Team
Project Manager

Lucideon Limited
Queens Road, Penkhull
Stoke-on-Trent
Staffordshire ST4 7LQ

T +44 (0)1782 764428
enquiries@lucideon.com
www.lucideon.com

CONTENTS

1 INTRODUCTION

Lucideon Limited were commissioned by the client, Pure Vista Ltd, to carry out load testing in accordance with BS 6180:2011 Barriers in and about buildings, to allow their balustrade system to be classified for use in accordance with the Code of Practice included within the standard.

The testing was carried out at Lucideon's facilities at Queens Road, Penkhull, Stoke on Trent.

This report summarises the test results obtained during the test programme and does not provide interpretation of those results.

2 TEST SAMPLES

A single system was tested designated as follows:

- MegaGrip.

The system had been designed and intended to be used as the base mount for free standing balustrades. The system and glass was installed by Pure Vista personnel.

3 TEST PROGRAMME

A horizontal line load was applied to the systems using the following glazed sections:

- MegaGrip into Concrete:
  - 25.5 mm PVB Glass;
- MegaGrip into Steel:
  - 25.5 mm PVB Glass.

4 TEST PREPARATION

4.1 MegaGrip Concrete Fix

The channel was bolted to the top of a concrete block, which was fixed to the floor of the test facility.

The 1.0 m length of channel was bolted to the block at 200 mm centres, 100 mm from the end and 200 mm thereafter). The clamps were installed at 4 clamps per meter, spaced at 100 mm from the edge with 200 mm between clamps.

4.2 MegaGrip Steel Fix

The channel was bolted to the top of a piece of reinforced steel C section measuring 1500 mm x 90 mm x 5 mm. The section was welded to a steel anvil which in turn was bolted to the floor of the test facility.

The 1.0 m length of channel was bolted to the steel C section at 200 mm centres, 100 mm from the end and 200 mm thereafter). The clamps were installed at 4 clamps per meter, spaced at 100 mm from the edge with 200 mm between clamps.

5 TEST METHOD

A horizontal imposed line load was applied to the glass at a given height above the datum level of the floor and the deflection measured at varying points on the panel. The load application point and position of the transducer are given in Table 1. The load was applied via a hydraulic ram and the deflection measured using a linear voltage displacement transducer (see Plate 1). The samples were tested until destruction occurred or until 25 mm of deflection was recorded at which point the test was stopped.

Table 1 - Load Application and Transducer Position

System	Fix	Glass	Load Application (mm)	Transducer Position (mm)
MegaGrip	Concrete	25.5 mm PVB	1200	1200
MegaGrip	Concrete	25.5 mm PVB	1500	1500
MegaGrip	Steel	25.5 mm PVB	1100	1800
MegaGrip	Steel	25.5 mm PVB	1200	1200

6 RESULTS

The tests were carried out in accordance with the guidance given in BS 6180 Barriers in and about buildings – Code of Practice. The standard states that the maximum allowable deflection for a free standing glass protective barrier panel when loaded at a minimum height of 1100 mm is 25 mm.

The loads achieved by the Pure Vista systems tested under horizontal imposed line load are given in Tables 1 - 2. All figures quoted in the Tables contain no safety factors and are direct loads as achieved by the system under test conditions.

TABLES

Table 2 - Summary of Performance of Pure Vista MegaGrip Balustrade System Mounted into Concrete Tested under Horizontal Imposed Line Load

Fix	Glass Type	Load Application (mm)	Transducer Position (mm)	Imposed Line Load at 25 mm Deflection (kN/m)	Working Line Load for System (kN/m)	Deflection at Working Line Load for System (mm)
Concrete	25.5 mm Laminated PVB	1200	1200	1.81	1.50	19.43
Concrete	25.5 mm Laminated PVB	1500	1500	1.03	0.74	18.15

Table 3 - Summary of Performance of Pure Vista MegaGrip Balustrade System Mounted into Steel Tested under Horizontal Imposed Line Load

Fix	Glass Type	Load Application (mm)	Transducer Position (mm)	Imposed Line Load at 25 mm Deflection (kN/m)	Working Line Load for System (kN/m)	Deflection at Working Line Load for System (mm)
Steel	25.5 mm Laminated PVB	1100	1800	2.04	1.50	17.01
Steel	25.5 mm Laminated PVB	1200	1200	2.06	1.50	16.68

Table 4- Summary of Suitability of Pure Vista MegaGrip Base Mounted into Concrete in Accordance with Table 2 of BS 6180:2011

Type of Occupancy for Part of the Building	Examples of Specific Use	Horizontal Uniformly Distributed Line Load (kN/m)	Concrete		Steel	
			25.5 mm PVB Glass (1200mm)	25.5 mm PVB Glass (1500mm)	25.5 mm PVB Glass (1100mm)	25.5 mm PVB Glass (1200mm)
Domestic and residential activities	(i) all areas within or serving exclusively one single family dwelling including stairs, landings, etc. but excluding external balconies and edges of roofs	0.36	✓	✓	✓	✓
	(ii) other residential, i.e. houses of multiple occupancy and balconies, including Juliette balconies and edges of roofs in single family dwellings	0.74	✓	✓	✓	✓
Offices and work areas not included elsewhere, including storage areas	(iii) light access stairs and gangways not more than 600 mm wide	0.22	✓	✓	✓	✓
	(iv) light pedestrian traffic routes in industrial and storage buildings except designated escape routes	0.36	✓	✓	✓	✓
	(v) areas not susceptible to overcrowding in office and institutional buildings, also industrial and storage buildings except as given above	0.74	✓	✓	✓	✓
Areas where people might congregate	(vi) areas having fixed seating within 530 mm of the barrier, balustrade or parapet	1.50	✓	X	✓	✓

Type of Occupancy for Part of the Building	Examples of Specific Use	Horizontal Uniformly Distributed Line Load (kN/m)	Concrete		Steel	
			25.5 mm PVB Glass (1200mm)	25.5 mm PVB Glass (1500mm)	25.5 mm PVB Glass (1100mm)	25.5 mm PVB Glass (1200mm)
Areas with tables or fixed seating	(vii) restaurants and bars	1.50	✓	X	✓	✓
Areas without obstacles for moving people and not susceptible to overcrowding	(viii) stairs, landings corridors ramps	0.74	✓	✓	✓	✓
	(ix) external balconies including Juliette balconies and edges of roofs; footways and pavements within building cartilage adjacent to basement/sunken areas	0.74	✓	✓	✓	✓
Areas susceptible to overcrowding	(x) footways or pavements less than 3 m wide adjacent to sunken areas	1.50	✓	X	✓	✓
	(xi) theatres, cinemas, discotheques, bars, auditoria, shopping malls, assembly areas, studios; footways or pavements greater than 3 m wide adjacent to sunken areas	3.00	X	X	X	X
	(xii) grandstands and stadia	(Note 1)	-	-	-	-
Retail areas	(xiii) all retail areas including public areas of banks/building societies or betting shops	1.50	✓	X	✓	✓
Vehicular	(xiv) pedestrian areas in car parks, including stairs, landings, ramps, edges of internal floors, footways, edges of roofs	1.50 (Note 2)	✓	X	✓	✓

Type of Occupancy for Part of the Building	Examples of Specific Use	Horizontal Uniformly Distributed Line Load (kN/m)	Concrete		Steel	
			25.5 mm PVB Glass (1200mm)	25.5 mm PVB Glass (1500mm)	25.5 mm PVB Glass (1100mm)	25.5 mm PVB Glass (1200mm)
	(xv) horizontal loads imposed by vehicles	3.0 (Note 2)	-	-	-	-

NOTE: The results given in this report apply only to the samples that have been tested.

END OF REPORT

PLATE

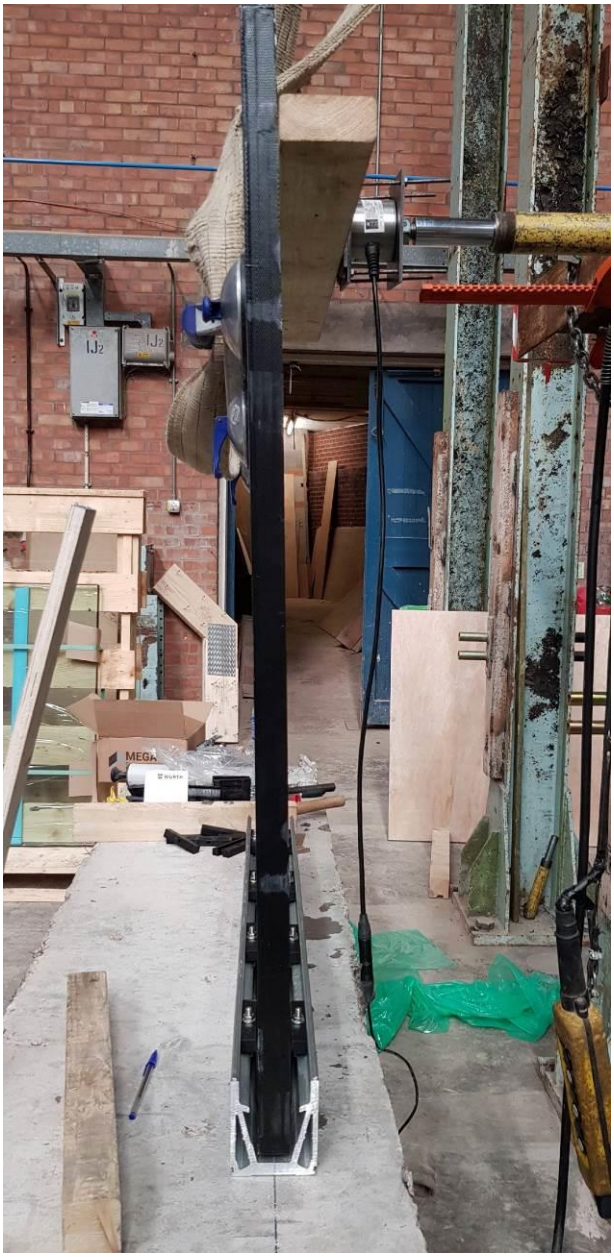

Plate 1 – Generic Test Configuration

Chart 1 - Load Deflection Curve for Pure Vista MegaGrip System Incorporating 25.5 mm PVB Glass Fixed into Concrete

Test Report: 182262/Ref. 1

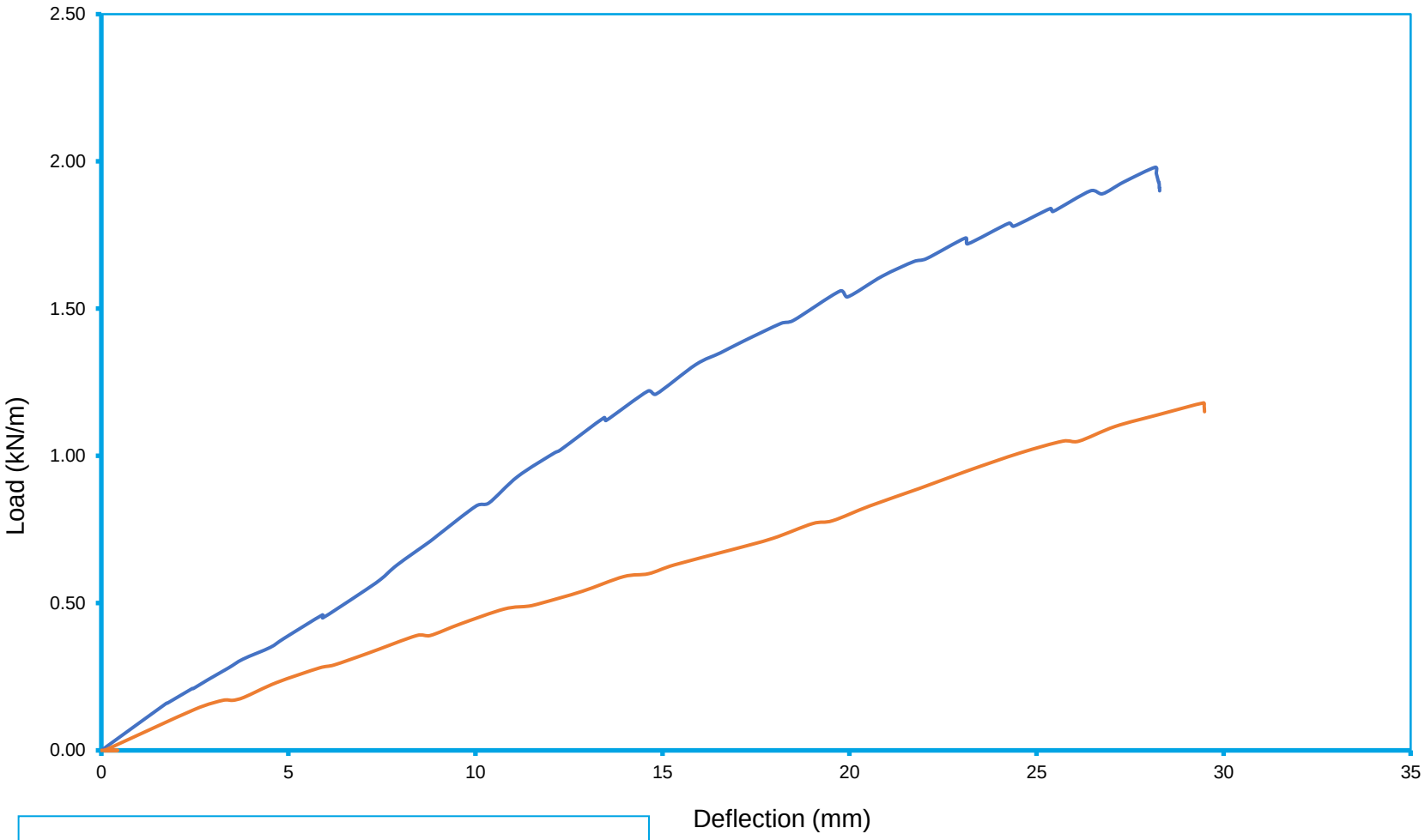

Key 25.5mm PVB 1200mm 25.5mm 1500 mm

Chart 2 - Load Deflection Curve for Pure Vista Posi-Glaze System Incorporating 25.5 mm PVB Glass Fixed into Steel

Test Report: 182262/Ref. 1

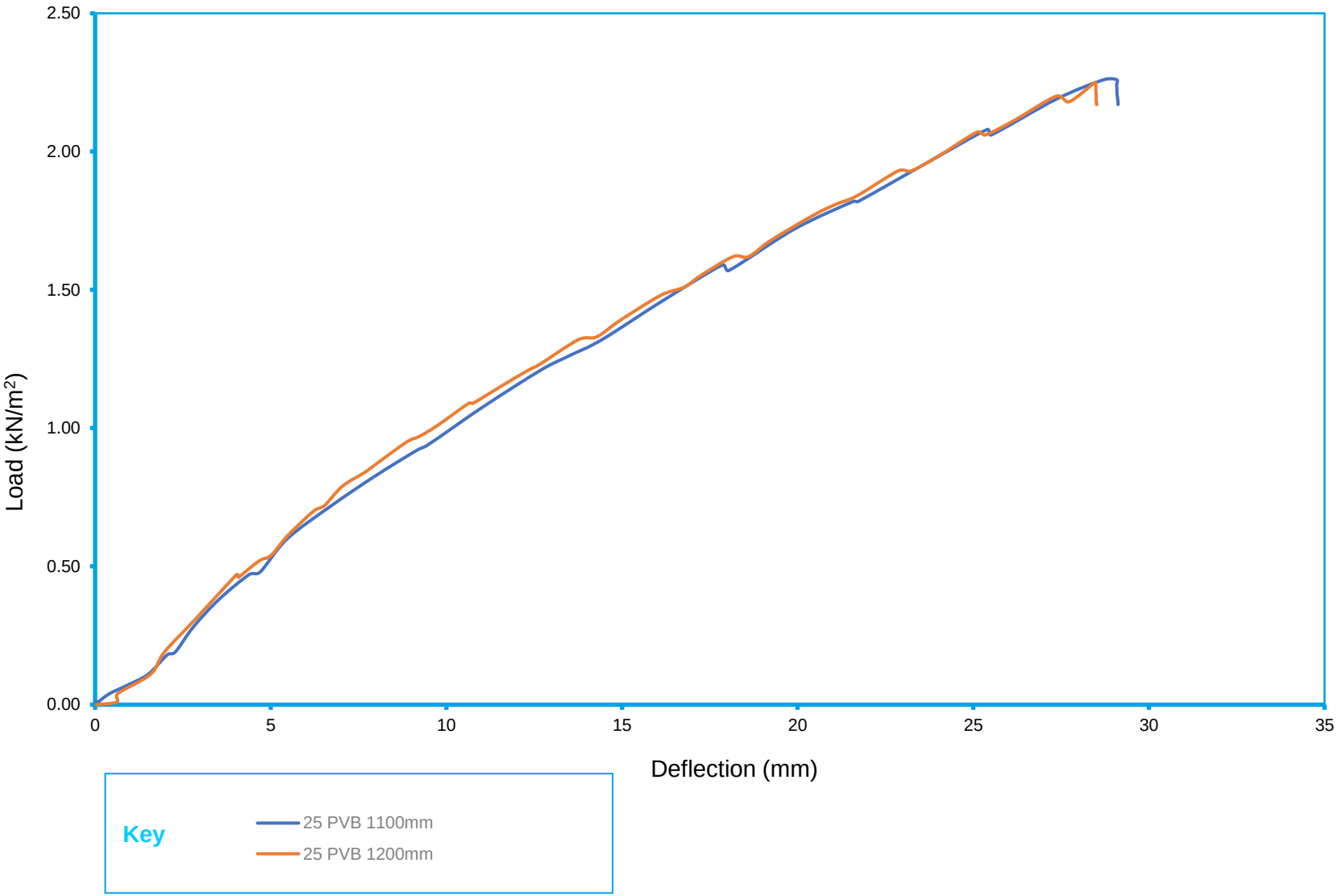

TEST REPORT

Lucideon Reference:	174989 (QT-47953/1/GMB & QT-48520/1/GMB)/Ref. 1
Project Title:	Simulated Wind Loading of Pure Vista MegaGrip Balustrade System
Client:	
For the Attention of:	
Author(s):	Miss Lisa Cobden
Report Date:	15 December, 2017
Purchase Order No.:	1967 & 1987
Work Location:	Lucideon UK

Miss Joanne Booth
Consultancy Team
Reviewer

Miss Lisa Cobden
Consultancy Team
Project Manager

Lucideon Limited
Queens Road, Penkhull
Stoke-on-Trent
Staffordshire ST4 7LQ

T +44 (0)1782 764428
enquiries@lucideon.com
www.lucideon.com

CONTENTS

1 INTRODUCTION

Lucideon Limited were commissioned by the client, Pure Vista Ltd, to carry out simulated wind loading testing using an air bag system to apply a uniformly distributed load.

The testing was carried out at Lucideon's facilities at Queens Road, Penkhull, Stoke on Trent.

This report summarises the test results obtained during the test programme and does not provide interpretation of those results.

2 TEST SAMPLES

The system tested was designated as follows:

- MegaGrip.

The systems and glass were installed by Pure Vista personnel.

3 TEST PROGRAMME

The MegaGrip system was mounted on to a 10 mm thick steel I-section the appropriate thickness glass panel installed and subjected to a Positive wind load.

The following glass panels having dimensions 1800 mm x 1000 mm (h x w) were tested:

- 25.5 mm Sentry Glass.
- 31.5 mm PVB Glass.

4 TEST PREPARATION

The channel was bolted to the top of a piece of 10 mm thick steel I-section, which was welded to a steel anvil that was bolted to the floor of the test facility. The 1.00 m length of MegaGrip channel was bolted to the steel section at 200 mm centres using 13 mm bolts set in pre drilled counter sunk holes.

The appropriate thickness glass panel was fitted into the channel using the glass slip clamping system and clamping bar. The clamps were fitted at 4 per metre and spaced 100 mm from the edge with 200 mm between the clamps (See Plate 1).

5 TEST METHOD

An air bag was positioned on the face of the test panel and a reaction board was placed over this butting up-to and braced backed to the steel frame.

Two linear displacement transducers were located on an independent scaffold frame reading onto the rear of the panel with one positioned at the mid-point of the panel and the second positioned at the mid-point of the top edge of the glass panel.

A load was applied to the balustrade system via the air bags until a minimum deflection of 25mm was recorded at the centrally positioned transducer.

6 RESULTS

Tables 1 and 2 give the results for the applied load versus deflection of the panels.

At 25 mm mid-point deflection the 31.5 mm PVB glass panel achieved a maximum load of 5.52 kN/m^2 and the 25.5 mm Sentry glass achieved a maximum load of 6.12 kN/m^2.

At the midpoint top edge of the 31.5 mm PVB glass panel at the maximum load of 5.52 kN/m^2 a deflection of 55.44 mm was recorded. At the mid-point top edge of the 25.5 mm Sentry glass panel at the maximum load of 6.12 kN/m^2, a deflection of 58.94 mm was recorded.

7 DISCUSSION

Under wind loading there is no pass or fail criteria, the system will either be adequate or inadequate in any particular situation. So for example a system installed on a building at the top of an escarpment in the North of Scotland will be expected to resist much greater wind forces than one in the centre of London. However, as an indication, the speed of a 3 second gust of wind in the North of Scotland could reach 56 m/s at 10 m above the ground with a likely incidence of return of once in 50 years. This is typical of the level that would be incorporated into design in the U.K. This gust has a dynamic pressure equivalent to 1.68 kN/m^2.

The 31.5 mm PVB glass panel achieved a maximum load of 5.52 kN/m^2 at mid-point deflection of 25 mm

The 25.5 mm Sentry glass panel achieved a maximum load of 6.12 kN/m^2 at mid-point deflection of 25 mm

NOTE: The results given in this report apply only to the samples that have been tested.

END OF REPORT

TABLES

Table 1 - Summary of Performance of Pure Vista MegaGrip Balustrade 31.5 mm PVB Glass Top Mounted into Steel Tested for Simulated Wind Load

Applied Load (kN/m^2)	Equivalent Simulated Wind Speed (m/S)	Deflection Mid-Point (mm)	Deflection at Mid-Point Top (mm)
0.05	9	0.16	0.29
0.18	17	0.48	1.07
1.72	54	1.06	2.39
2.25	61	2.41	5.36
3.19	73	3.71	8.17
3.44	76	8.51	18.44
5.04	92	23.25	49.88
5.52	96	25.00	55.44

Table 2 - Summary of Performance of Pure Vista MegaGrip Balustrade 25.5 mm Sentry Glass Top Mounted into Steel Tested for Simulated Wind Load

Applied Load (kN/m^2)	Equivalent Simulated Wind Speed (m/S)	Deflection Mid-Point (mm)	Deflection at Mid-Point Top (mm)
0.06	10	0.66	1.69
0.82	37	1.17	2.71
1.36	48	4.52	10.53
3.18	73	9.69	22.15
4.81	89	15.3	34.48
5.21	93	16.54	37.24
5.70	97	17.87	40.14
5.97	100	18.33	41.19
6.12	101	25.00	58.94

PLATE

Plate 1 - General Test Configuration

Chart 1 - Load Deflection Curve for Simulated Wind Load of Pure Vista Mega Grip Incorporating 31.5 mm PVB Glass Fixed Into Steel

Test Report: 174989/Ref. 1

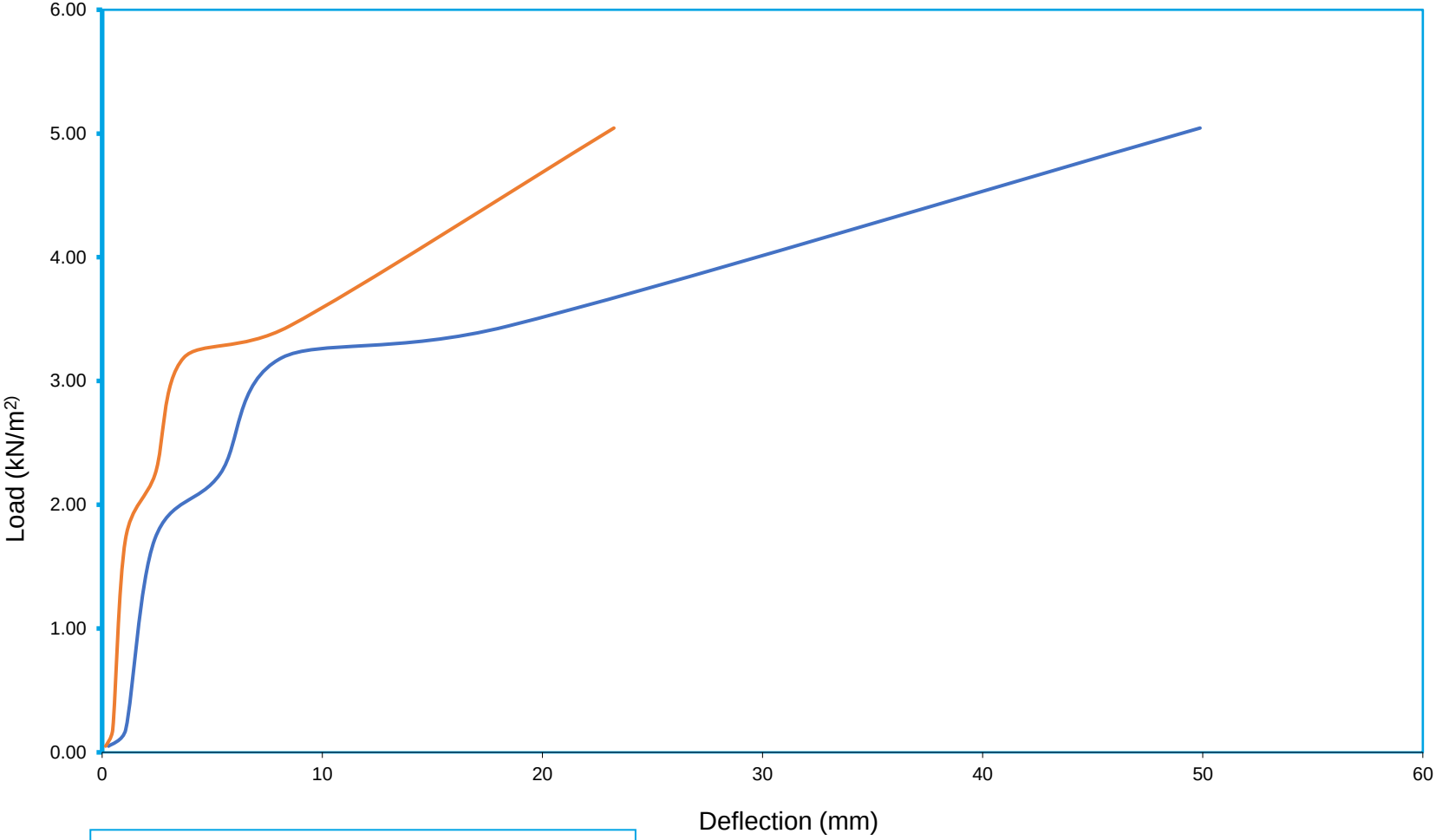

Key

UDL Deflection Top

Centre UDL

Chart 2 - Load Deflection Curve for Simulated Wind Load of Pure Vista Mega Grip Incorporating 25.5 mm Sentry Glass fixed Into Steel

Test Report: 174989/Ref. 1

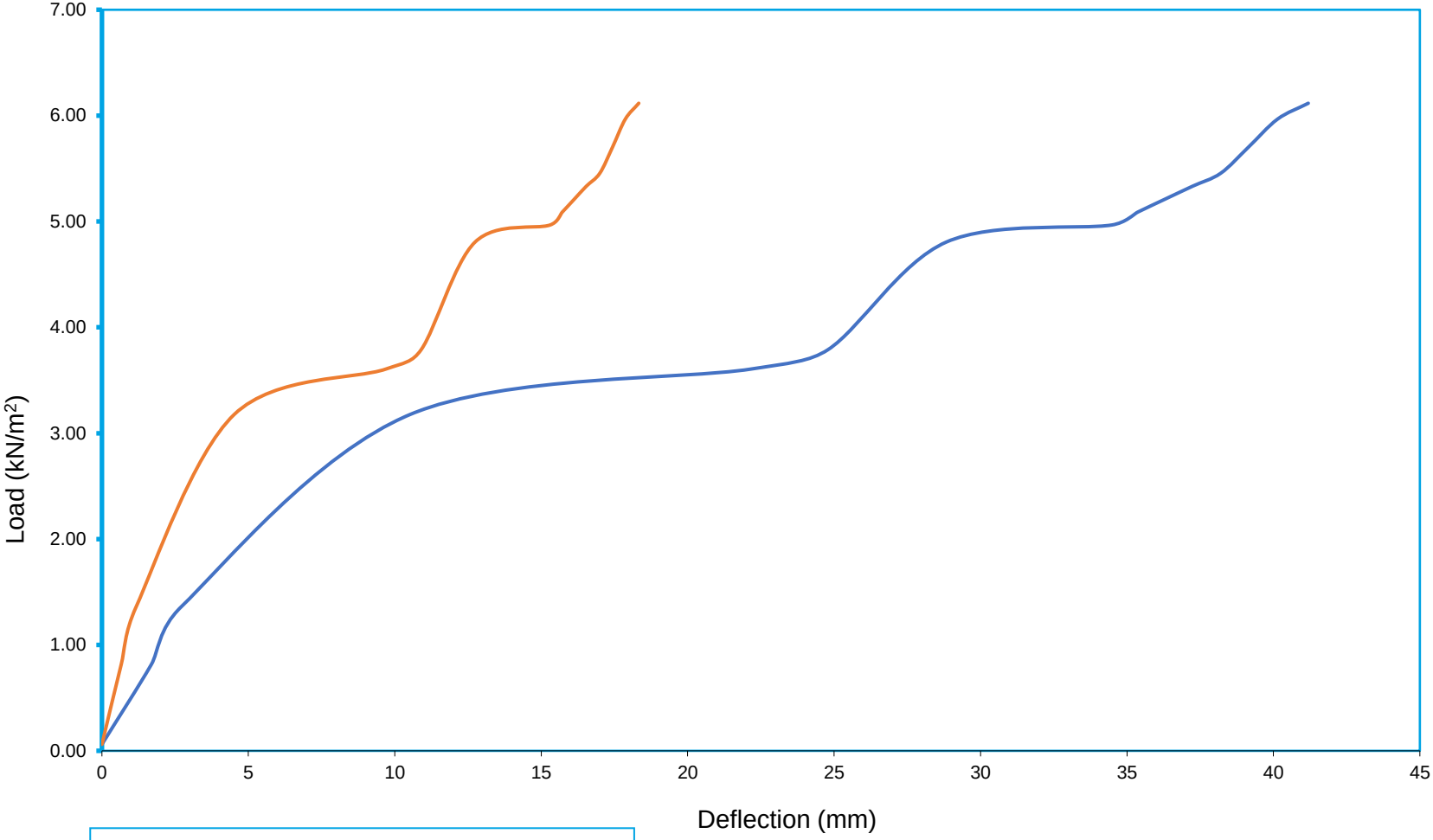

Key

Top UDL

Centre

TEST REPORT

Lucideon Reference:	174989 (QT-47953/1/GMB & QT-48520/1/GMB)/Ref. 6/Supp1
Project Title:	Testing of MegaGrip Balustrade System Based on BS 6180:2011 at 1.8 m Height
Client:	
For the Attention of:	
Author(s):	Miss Lisa Cobden
Report Date:	23 January, 2018
Purchase Order No.:	1967 & 1987
Work Location:	Lucideon UK

This report supersedes the report issued on 10.01.18.

Miss Joanne Booth
Consultancy Team
Reviewer

Miss Lisa Cobden
Consultancy Team
Project Manager

Lucideon Limited
Queens Road, Penkhull
Stoke-on-Trent
Staffordshire ST4 7LQ

T +44 (0)1782 764428
enquiries@lucideon.com
www.lucideon.com

CONTENTS

1 INTRODUCTION

Lucideon Limited were commissioned by the client, Pure Vista Ltd, to carry out load testing in accordance with BS 6180:2011 Barriers in and about buildings, to allow their balustrade system to be classified for use in accordance with the Code of Practice included within the standard.

The testing was carried out at Lucideon's facilities at Queens Road, Penkhull, Stoke on Trent.

This report summarises the test results obtained during the test programme and does not provide interpretation of those results.

2 TEST SAMPLES

A single system was tested and designated as:

- MegaGrip

The system had been designed and intended to be used as the base mount for free standing balustrades. The system and glass were installed by Pure Vista personnel.

3 TEST PROGRAMME

A horizontal line load was applied to the system using the following glazed sections:

- MegaGrip:
  - 31.5 mm Laminated PVB Glass;
  - 25.5 mm Laminated Sentry Glass.

4 TEST PREPARATION

The channel was bolted to the top of a piece of 10 mm thick steel I-section, which was welded to a steel anvil which in turn was welded and bolted to the floor of the test facility. The 1.00 m length of MegaGrip channel was bolted to the steel section at 200 mm centres using 12 mm bolts set in pre drilled counter sunk holes.

The appropriate thickness glass panel was fitted into the channel using the glass slip clamping system and clamping bar. The clamps were fitted at 4 per metre and spaced 100 mm from the edge with 200 mm between the clamps.

5 TEST METHOD

A horizontal imposed line load was applied to the glass at a height of 1.8 m above the datum level of the floor and the deflection measured at the top central point of the panel 1.8 m above the datum level of the floor. The load was applied via a hydraulic ram and the deflection measured using a linear voltage displacement transducer (see Plate 1).

6 RESULTS

The tests were carried out in accordance with the guidance given in BS 6180 Barriers in and about buildings – Code of Practice. The standard states that the maximum allowable deflection for a free standing glass protective barrier panel is 25 mm.

Table 2 of BS 6180 Barriers in and about buildings – Code of Practice categorises parapets, barriers and balustrades for areas of use depending on the loads they have achieved under testing.

The loads achieved by the Pure Vista systems tested under horizontal imposed line load to the maximum deflection of 25 mm are given in Table 1. All figures quoted in the Tables contain no safety factors and are direct loads as achieved by the system under test conditions.

Table 2 summarise the suitability of the tested systems in accordance with Table 2 of BS 6180:2011.

NOTE: The results given in this report apply only to the samples that have been tested.

END OF REPORT

TABLES

Table 1 - Summary of Performance of Pure Vista MegaGrip Balustrade Mounting Section Tested under Horizontal Imposed Line Load

Glass Span (mm)	Glass Type	Test Height (mm)	Imposed Line Load at 25 mm Deflection (kN/m)	Working Line Load for System (kN/m)	Deflection at Working Line Load for System (mm)
1000	31.5 mm Laminated PVB Glass	1800	1.64	1.5	22.75
1000	25 mm Laminated Sentry Glass	1800	1.44	0.74	12.66

Table 2 - Summary of Suitability of Pure Vista MegaGrip System in Accordance with Table 2 of BS 6180:2011

Type of Occupancy for Part of the Building	Examples of Specific Use	Horizontal Uniformly Distributed Line Load (kN/m)	MegaGrip System	
			31.5 mm PVB	25 mm Sentry
Domestic and residential activities	(i) all areas within or serving exclusively one single family dwelling including stairs, landings, etc. but excluding external balconies and edges of roofs	0.36	✓	✓
	(ii) other residential, i.e. houses of multiple occupancy and balconies, including Juliette balconies and edges of roofs in single family dwellings	0.74	✓	✓
Offices and work areas not included elsewhere, including storage areas	(iii) light access stairs and gangways not more than 600 mm wide	0.22	✓	✓
	(iv) light pedestrian traffic routes in industrial and storage buildings except designated escape routes	0.36	✓	✓
	(v) areas not susceptible to overcrowding in office and institutional buildings, also industrial and storage buildings except as given above	0.74	✓	✓
Areas where people might congregate	(vi) areas having fixed seating within 530 mm of the barrier, balustrade or parapet	1.50	✓	X
Areas with tables or fixed seating	(vii) restaurants and bars	1.50	✓	X
Areas without obstacles for moving people and not susceptible to overcrowding	(viii) stairs, landings corridors ramps	0.74	✓	✓
	(ix) external balconies including Juliette balconies and edges of roofs; footways and pavements within building cartilage adjacent to basement/sunken areas	0.74	✓	✓
Areas susceptible to overcrowding	(x) footways or pavements less than 3 m wide adjacent to sunken areas	1.50	✓	X
	(xi) theatres, cinemas, discotheques, bars, auditoria, shopping malls, assembly areas, studios; footways or pavements greater than 3 m wide adjacent to sunken areas	3.00	X	X
	(xii) grandstands and stadia	(Note 1)	-	-
Retail areas	(xiii) all retail areas including public areas of banks/building societies or betting shops	1.50	X	X
Vehicular	(xiv) pedestrian areas in car parks, including stairs, landings, ramps, edges of internal floors, footways, edges of roofs	1.50 (Note 2)	X	X
	(xv) horizontal loads imposed by vehicles	(Note 2)	-	-

PLATE

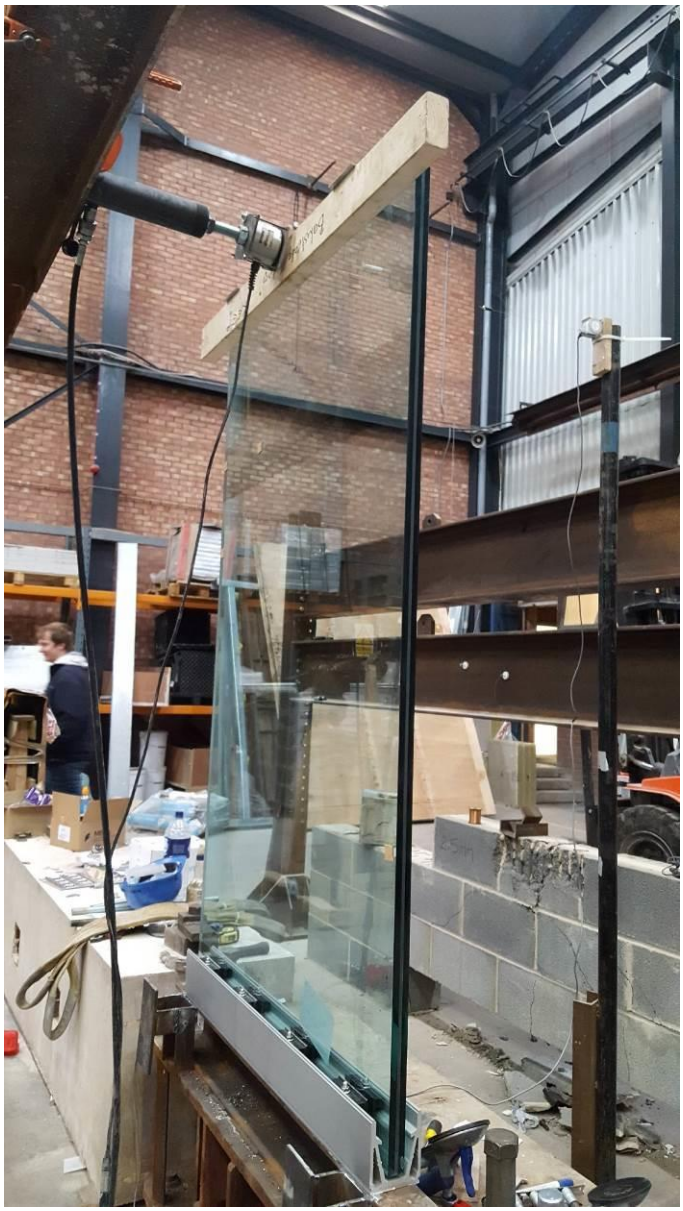

Plate 1 - General Test Configuration

Chart 1 - Load Deflection Curve for Pure Vista MegaGrip Balustrade System Fixed into Steel with the Application of a Horizontal Uniformly Distributed Line Load Applied at Height of 1.8 m

Test Report: 174989/Ref. 6/Supp1

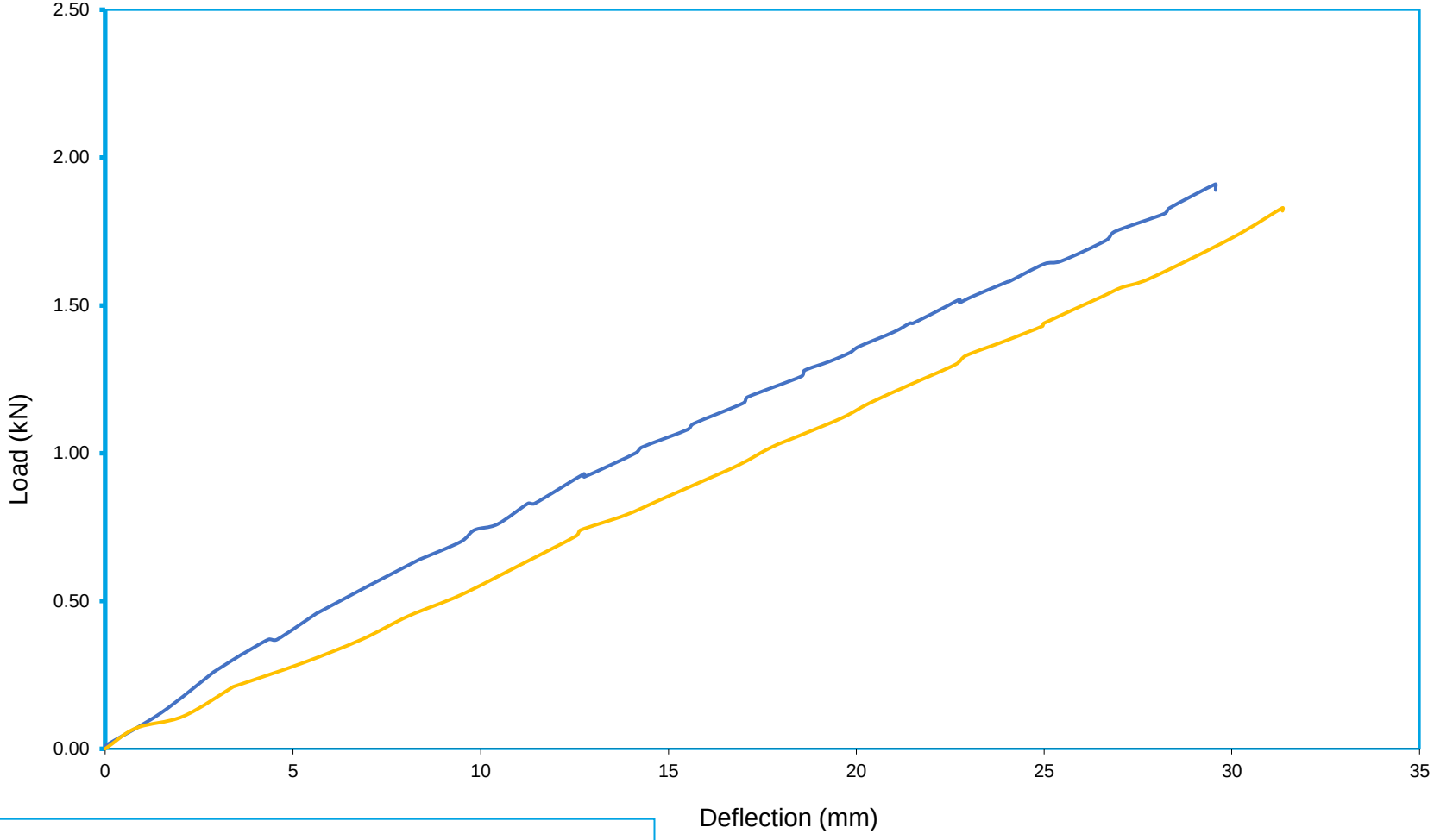

Key

31.5mm PVB Glass

25.5mm Sentry Glass