PRO-RAILING

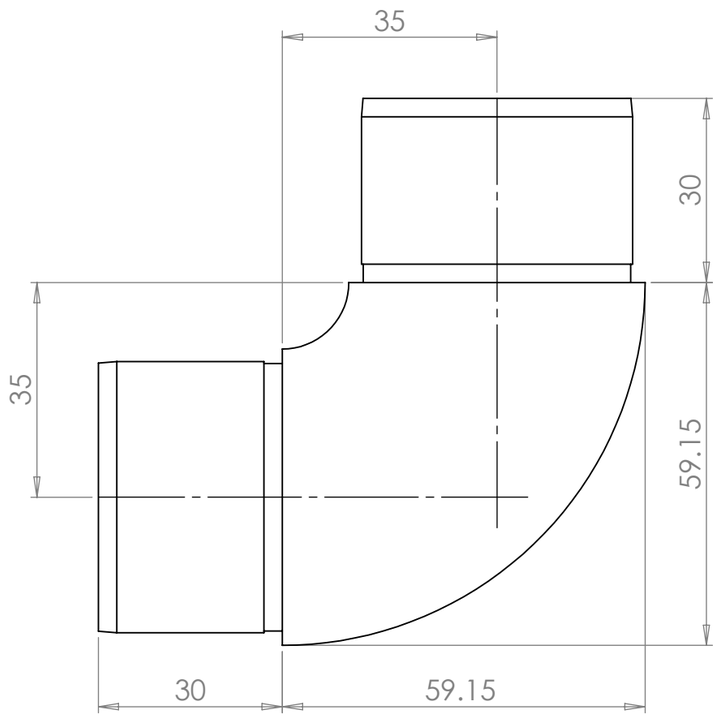

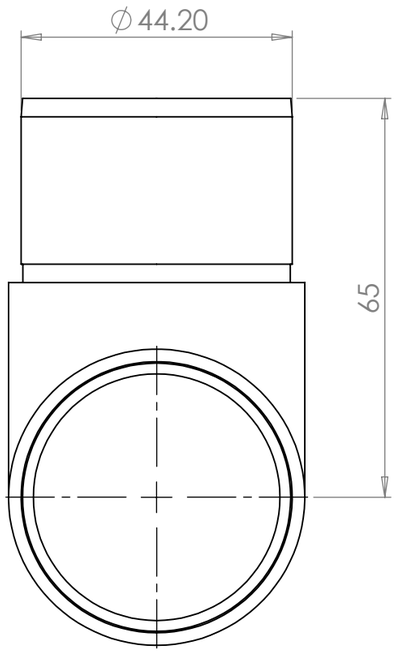

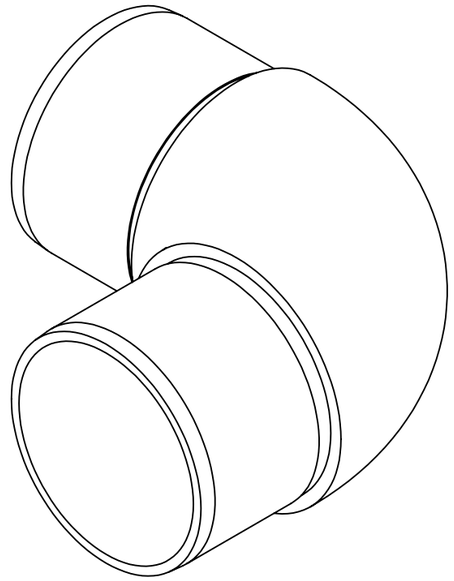

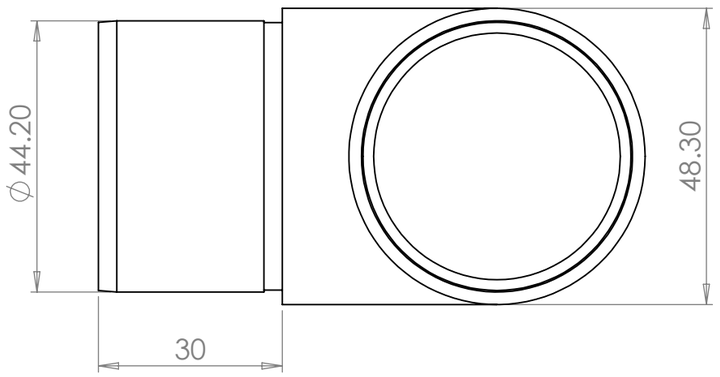

PART CODE	MATERIAL	FINISH
1804200D	AISI 304	Satin Polished
1806200D	AISI 316	Satin Polished

DESCRIPTION: Radiused Elbow - 90 Degree 48.3mm Fix

	NAME	DATE	REVISION		
DRAWN	GC	16/03/2017	A	*UNLESS OTHERWISE SPECIFIED ALL DIMENSIONS ARE IN MILLIMETERS*	A3
CHECKED				DO NOT SCALE DRAWING	SCALE:1:1