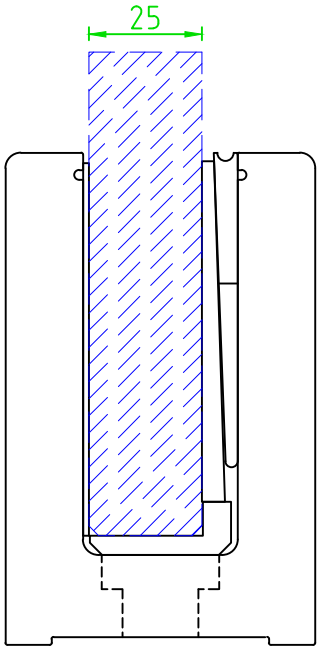

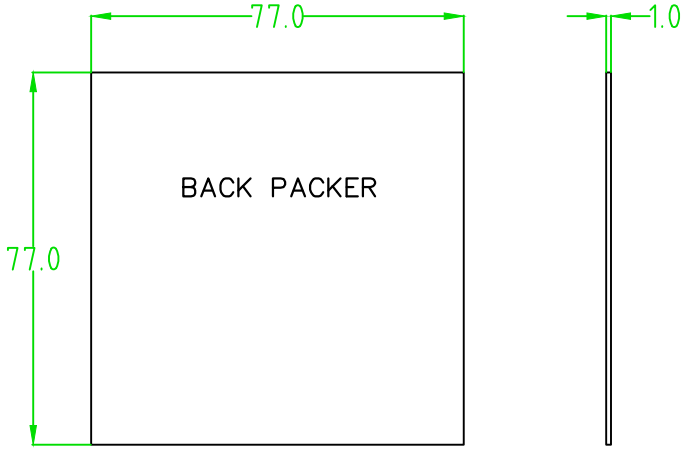

BASE PACKER

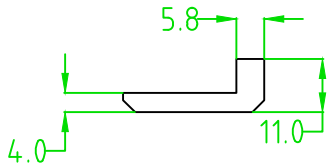

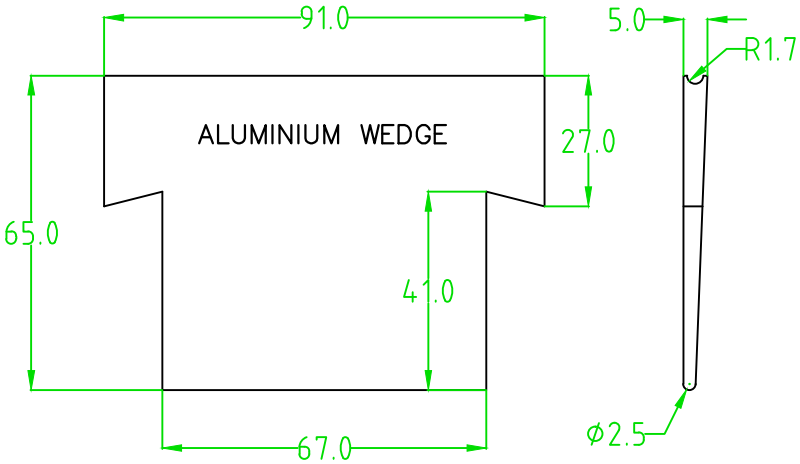

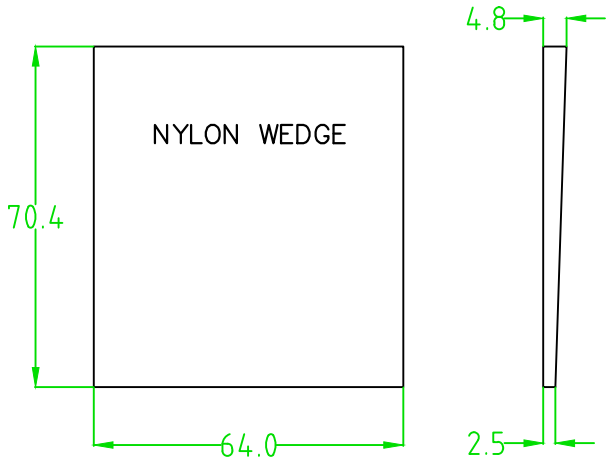

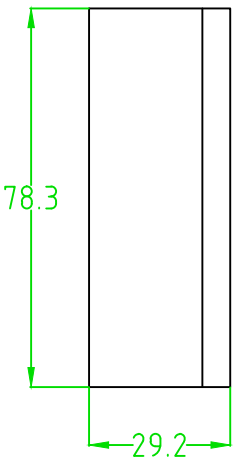

DRAWING INFORMATION:		PRODUCT DESCRIPTION:	PRO–RAILING DRAWINGS:
PRODUCT CODE:	180545125	PANELWEDGE BALUSTRADE WEDGE SET TO SUIT 25MM GLASS	DIMENSIONS FOR GUIDE ONLY COMPONENT MAY VARY SLIGHTLY FROM THE SIZES SHOWN.
REVISED:	25.01.2013		
SCALE:	DO NOT SCALE		