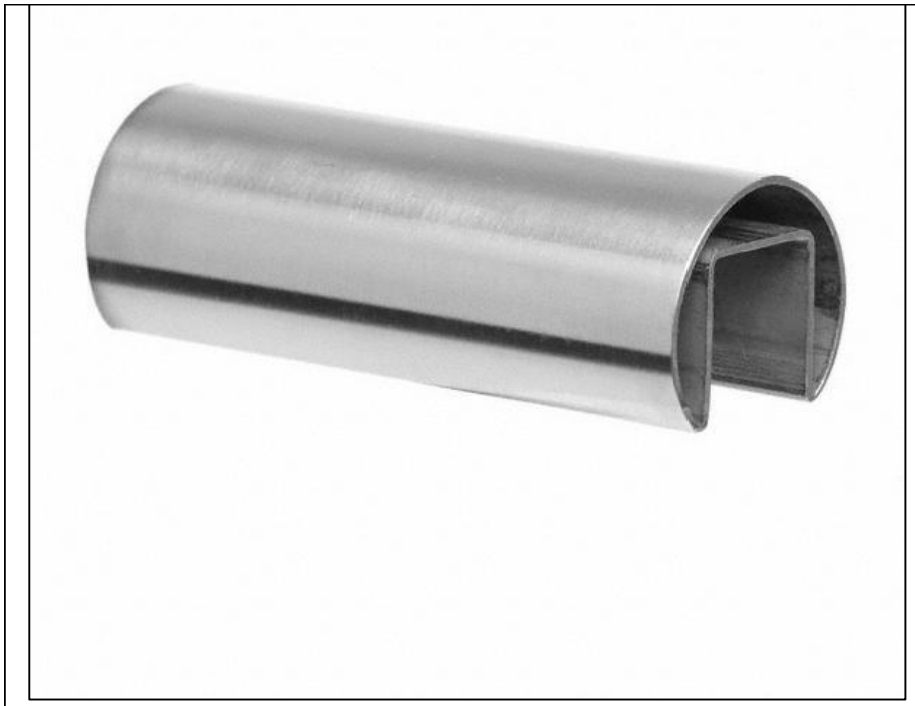

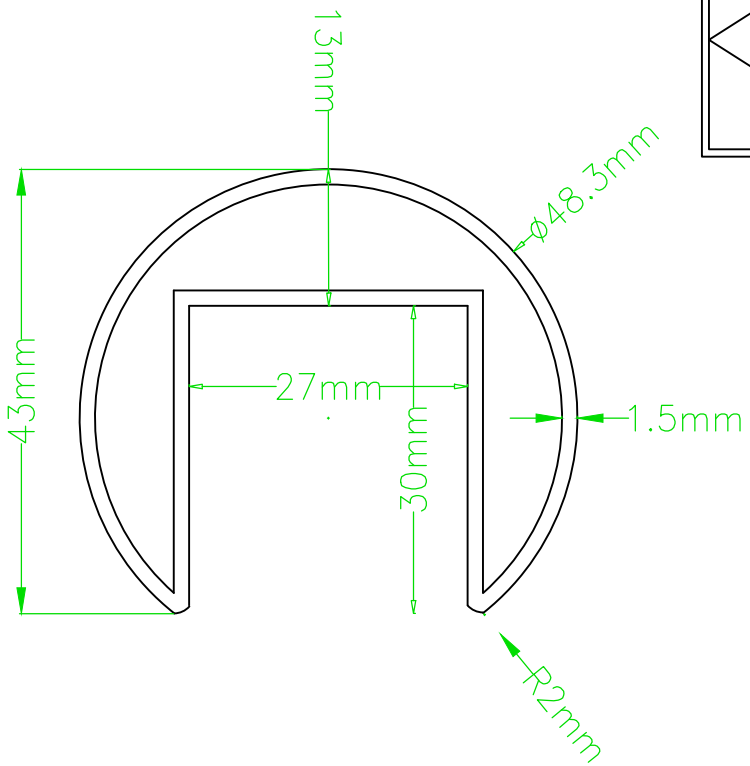


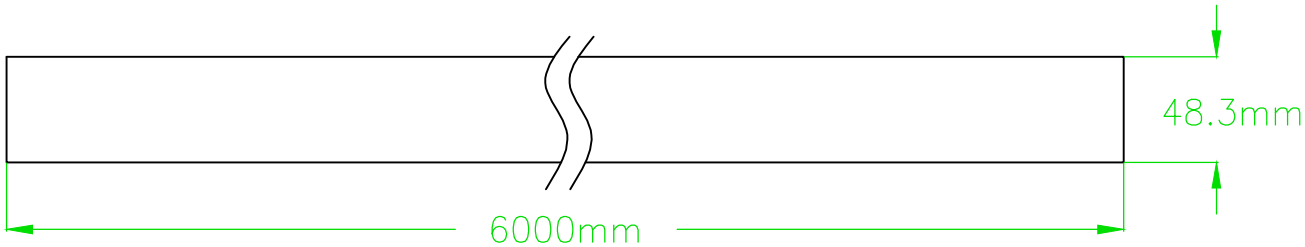


| DRAWING INFORMATION: | | PRODUCT DESCRIPTION: | PRO-RAILING DRAWINGS: |
|---|---|---|---|
| PRODUCT CODE: | 180*705D | SPLIT TUBE – 6M<br>48.3MM DIAMETER | DIMENSIONS FOR GUIDE ONLY<br>COMPONENT MAY VARY SLIGHTLY FOR THE SIZES SHOWN. |
| REVISED: | 19.04.2012 | | |
| SCALE: | DO NOT SCALE | | |