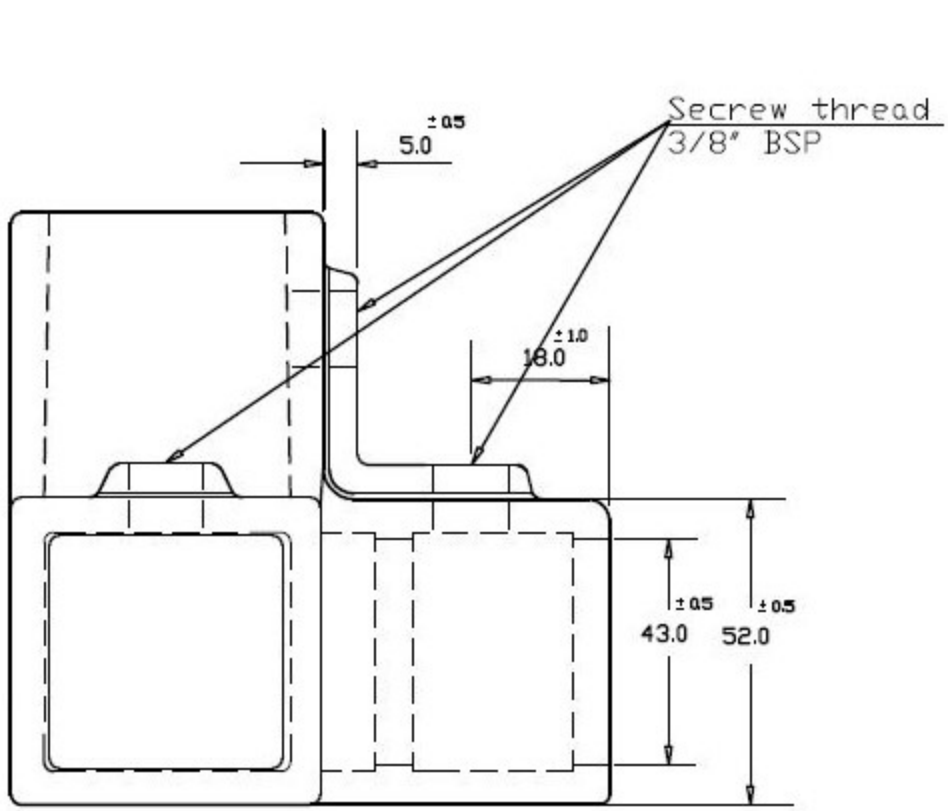
Secrew thread
3/8" BSP
±0.5
5.0
±1.0
18.0
±0.5
43.0
±0.5
52.0

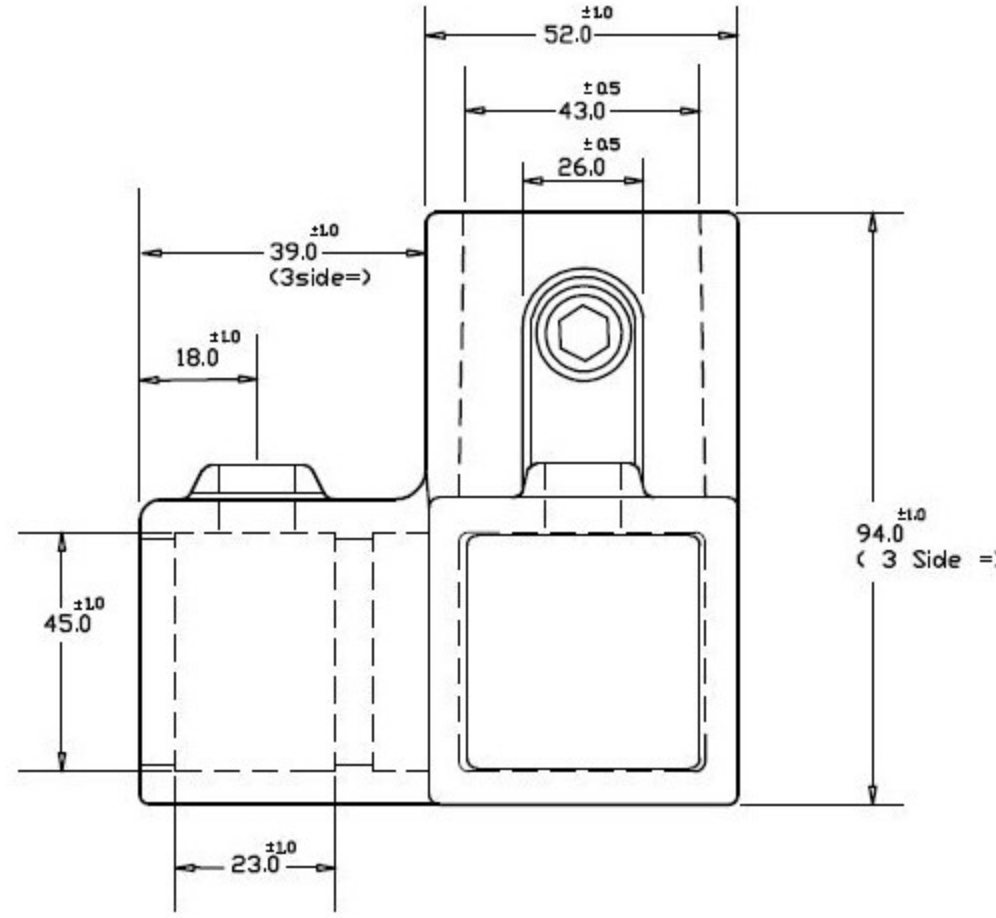
±1.0
52.0
±0.5
43.0
±0.5
26.0
±1.0
39.0
(3side=)
±1.0
18.0
±1.0
45.0
±1.0
94.0
(3 Side =)
±1.0
23.0