BRUNDLE
www.fhbrundle.co.uk

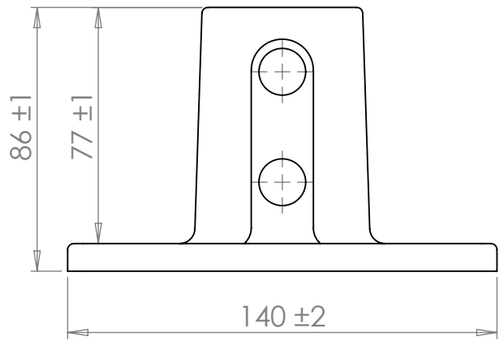

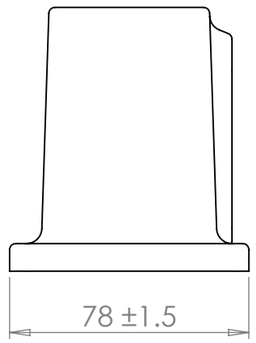

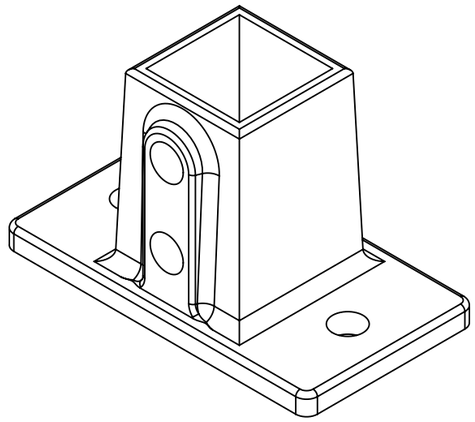

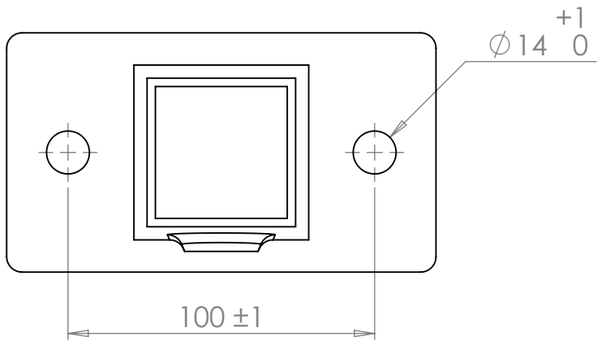

PART CODE	MATERIAL	FINISH
16S132	Malleable Cast Iron	Galvanised

DESCRIPTION: Tube Clamp RHS Railing Base Flange 40 x 40mm

	NAME	DATE	REVISION	UNLESS OTHERWISE SPECIFIED ALL DIMENSIONS ARE IN MILLIMETERS		A3
DRAWN	TS	23/08/2022	A			
CHECKED				DO NOT SCALE DRAWING	SCALE:1:2	