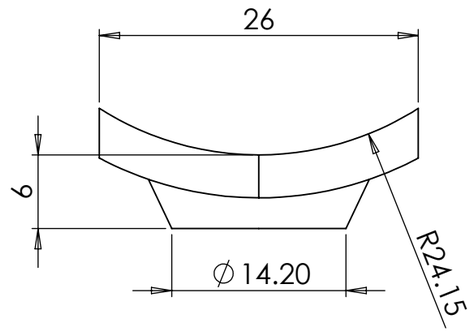

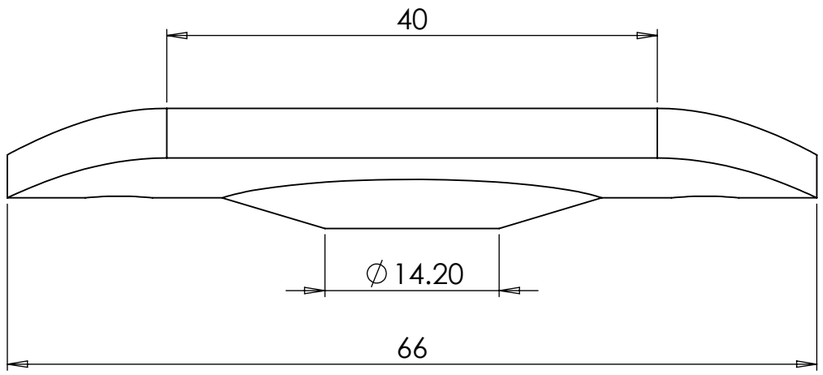

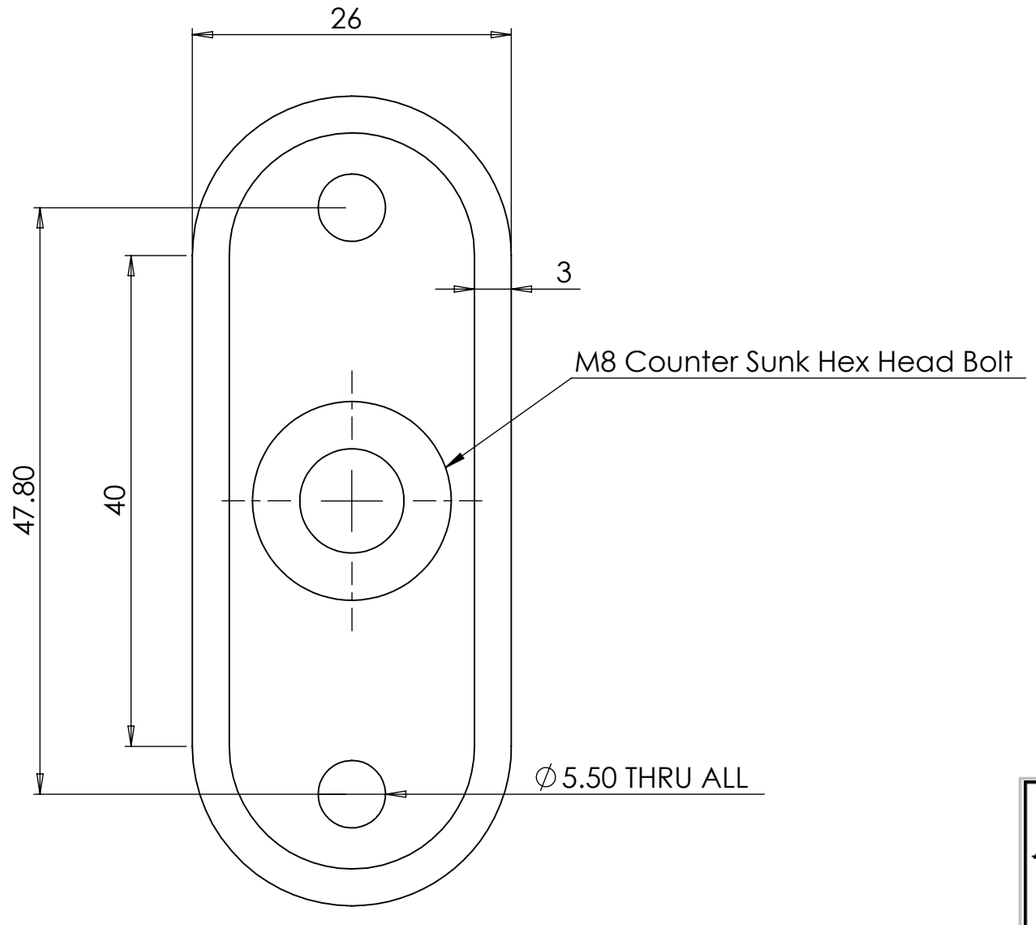

Pro-Railing
Tel: 0121 565 8282
Email: prorailing@brundle.com
Web: www.prorailing.co.uk

NOTES: Customer Drawing

DESCRIPTION: Round Top Fixed Saddle 48.3mm Fix 301/303/307 & 310F

MATERIAL: 304 Stainless Steel

PART NO: 1804351D

FINISH: Stainless Steel

UNLESS OTHERWISE SPECIFIED ALL DIMENSIONS ARE IN MILLIMETERS

GRIT SIZE: 320

DWG NO: NA

A3

	NAME	DATE	REVISION
DRAWN	GC		B
REV. BY			

WEIGHT: 0.038 Kg

SCALE:2:1 | DO NOT SCALE DRAWING | SHEET 1 OF 2

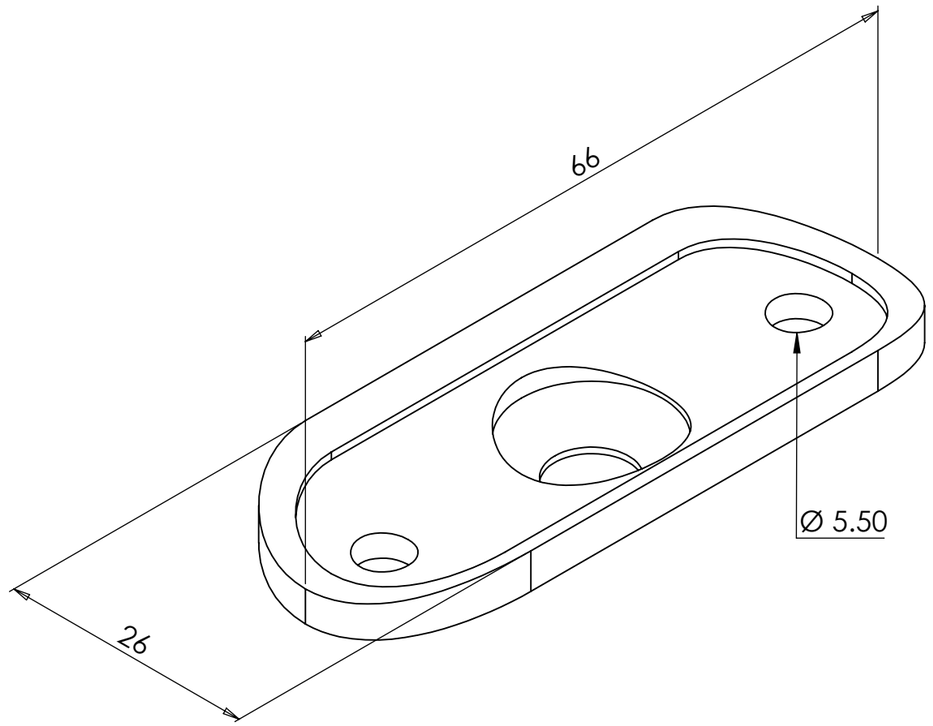

Pro-Railing
Tel: 0121 565 8282
Email: prorailing@brundle.com
Web: www.prorailing.co.uk

NOTES: Isometric View

DESCRIPTION: Round Top Fixed Saddle 48.3mm Fix 301/303/307 & 310F

MATERIAL: 304 Stainless Steel

PART NO: 1804351D

UNLESS OTHERWISE SPECIFIED
ALL DIMENSIONS ARE IN MILLIMETERS

FINISH: Stainless Steel

	NAME	DATE	REVISION
DRAWN	GC		B
REV. BY			

GRIT SIZE: 320

WEIGHT: 0.038 Kg

DWG NO: NA

A3

SCALE:2:1 | DO NOT SCALE DRAWING | SHEET 2 OF 2