LITIUS DECORATIVE SLIDING DOOR KIT

WITH PELMET

For Wood Doors

Installation Instructions

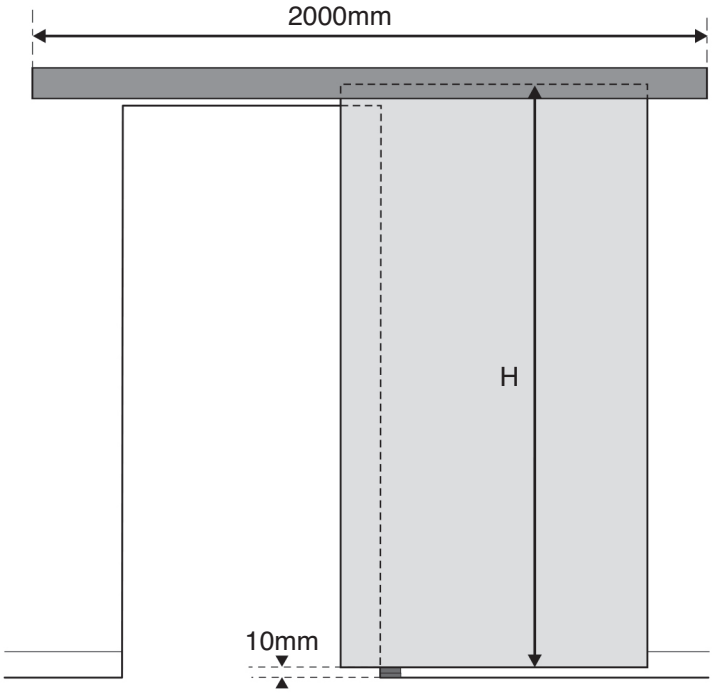

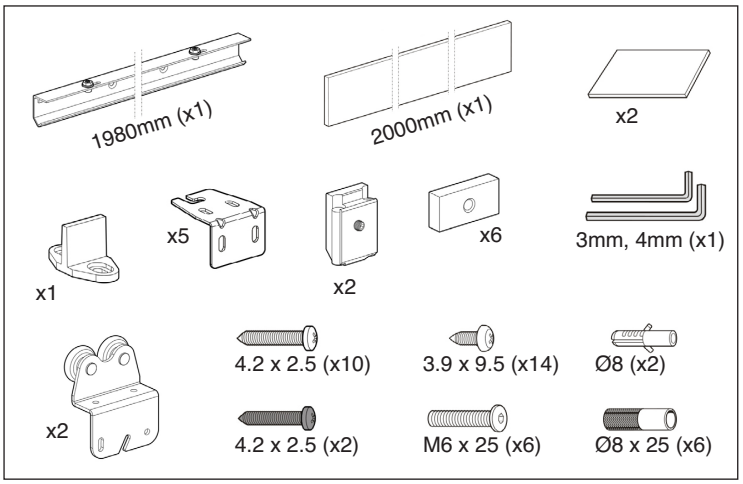

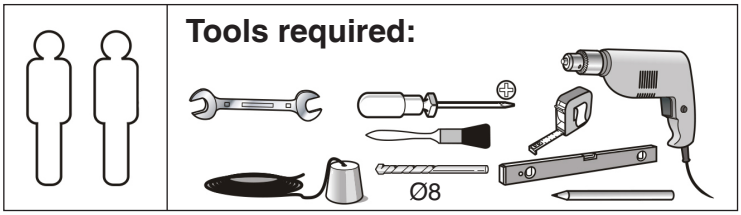

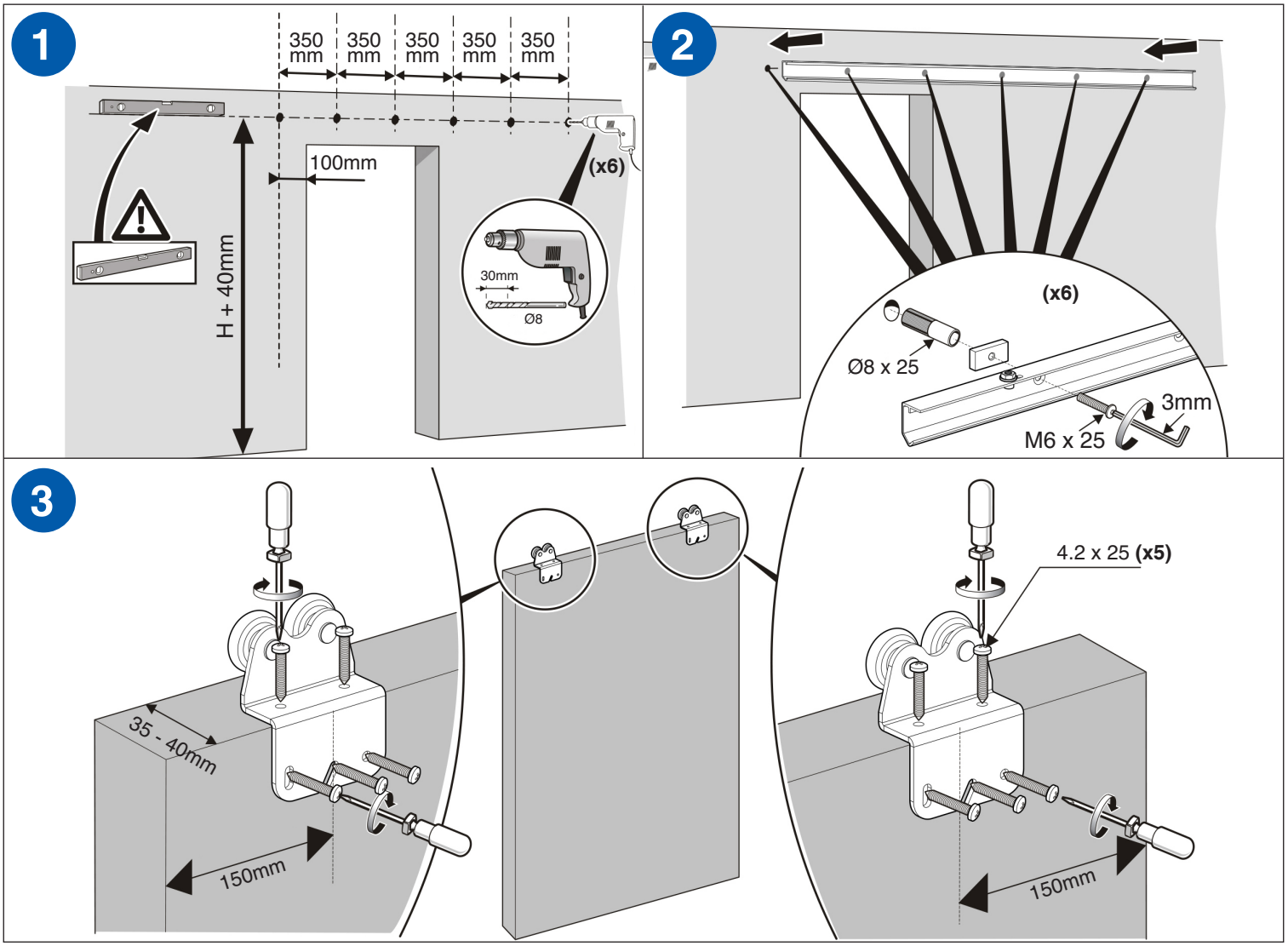

INSTALLATION INSTRUCTIONS

4

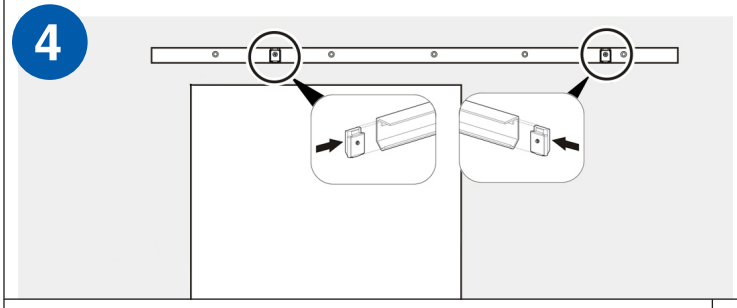

5

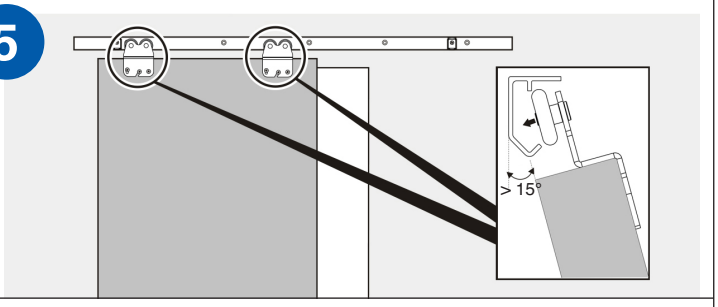

6

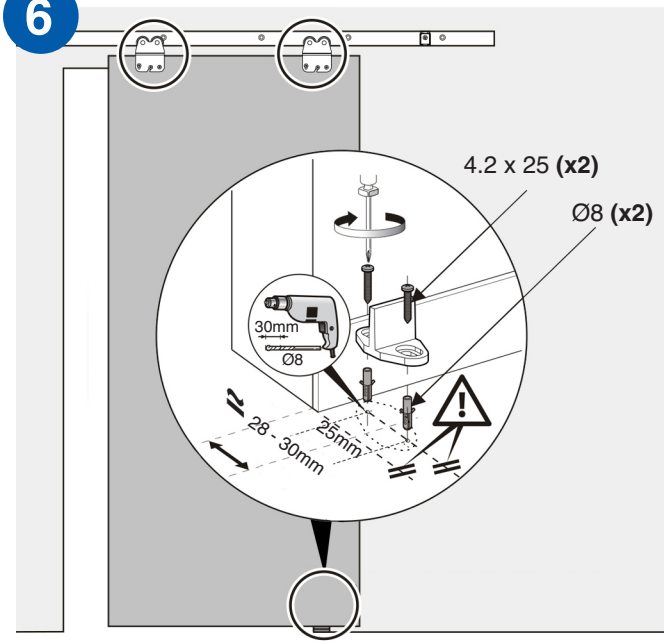

7

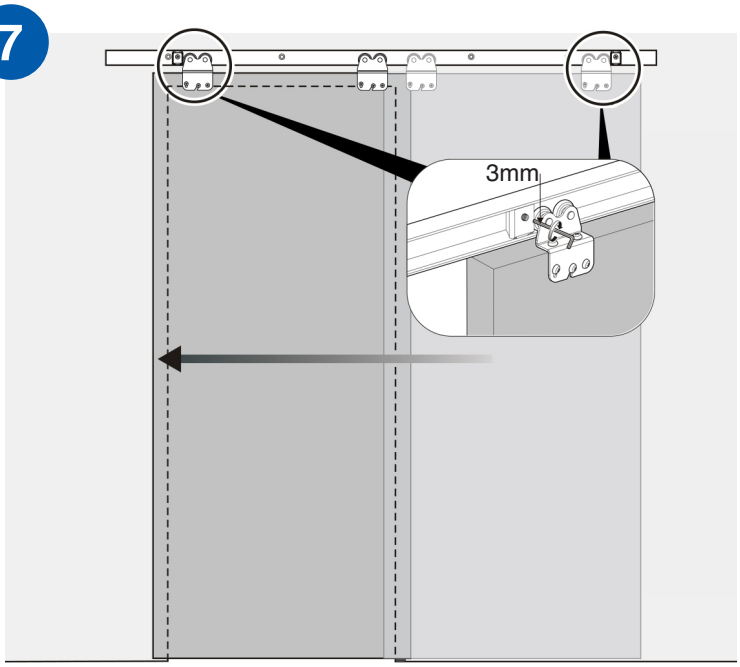

8

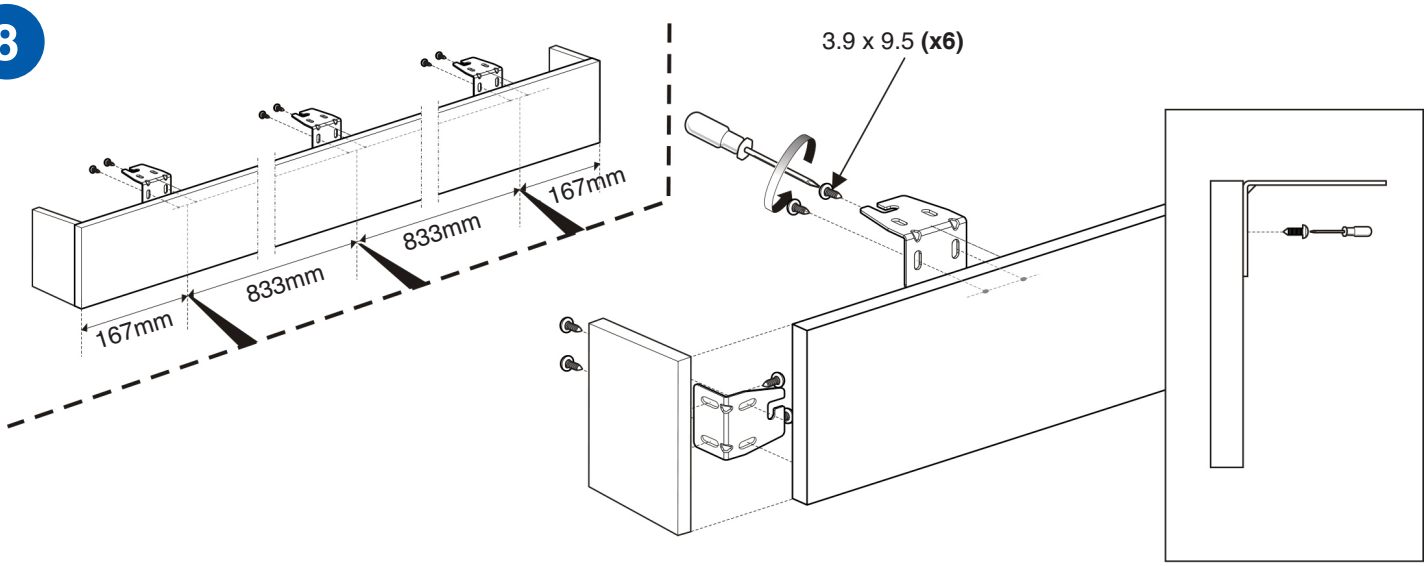

9

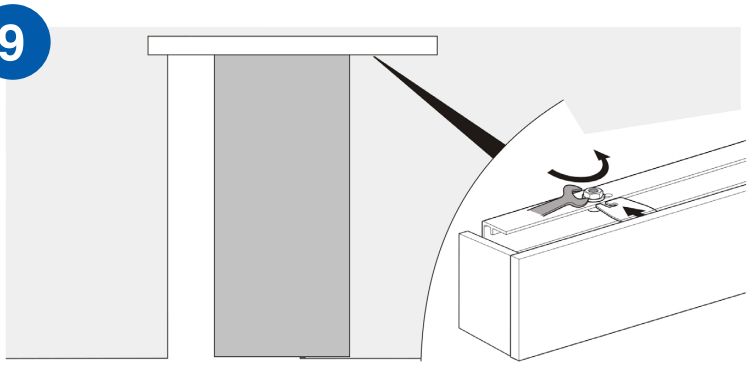
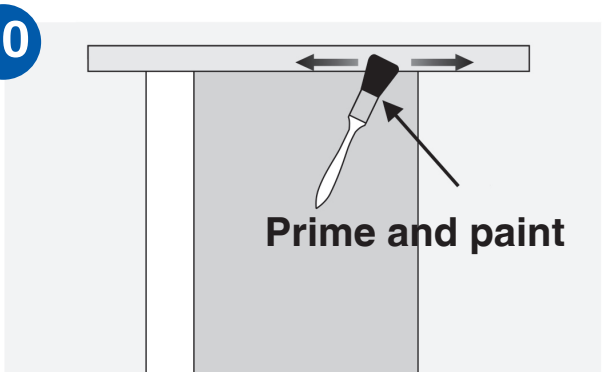
10