BRUNDLE
www.fhbrundle.co.uk

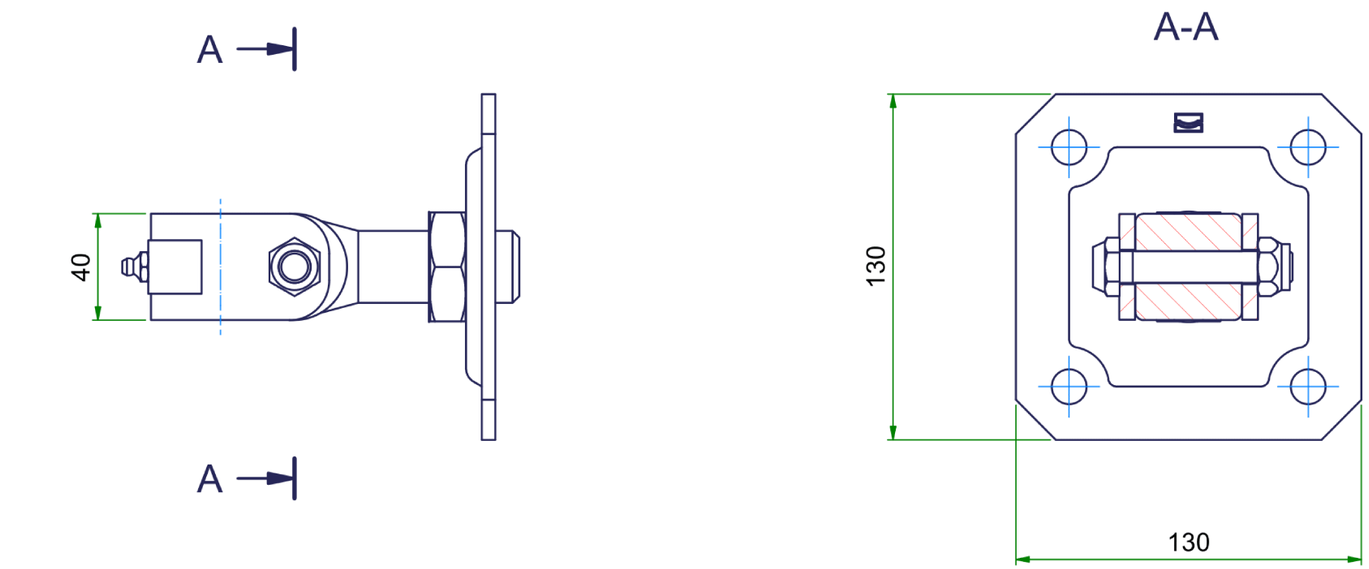

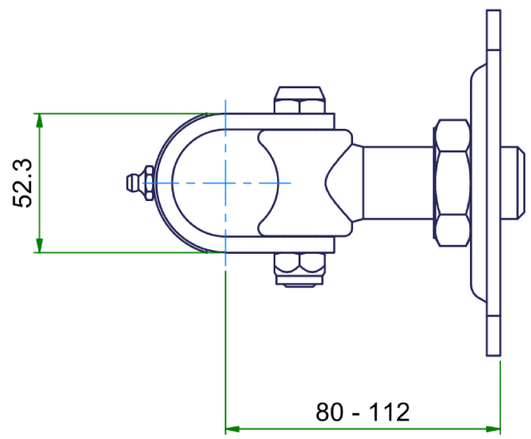

DESCRIPTION: Strap Hinge with Plate - M27 Galvanised						
	NAME	DATE	REVISION	*UNLESS OTHERWISE SPECIFIED ALL DIMENSIONS ARE IN MILLIMETERS*		A3
DRAWN	TS	05/10/2021	A			
CHECKED				DO NOT SCALE DRAWING	SCALE:1:2	